TREKHAKEN • ATTELAGES • ANHÄNGERVORRICHTUNGEN • TOWBARS • ENHANCES • ANHÆNGERTRÆK

Montagehandleiding | instructions de montage | Einbauanleitung | Mounting instruction
Instrucciones de montaje | monteringsvejledning

Passat B9 variant (CJ5)

10/'23-

R-LINE

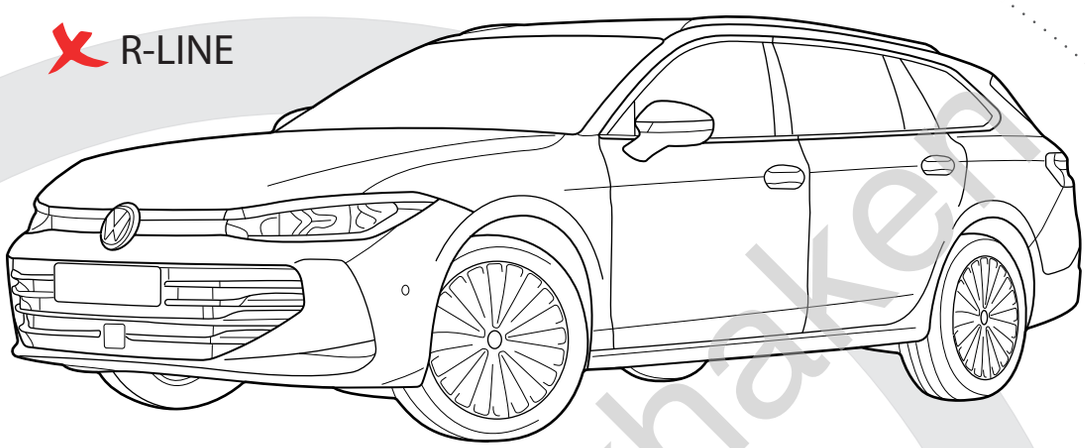

Skoda Superb IV combi (NZ5)

04/'24 -

R-LINE

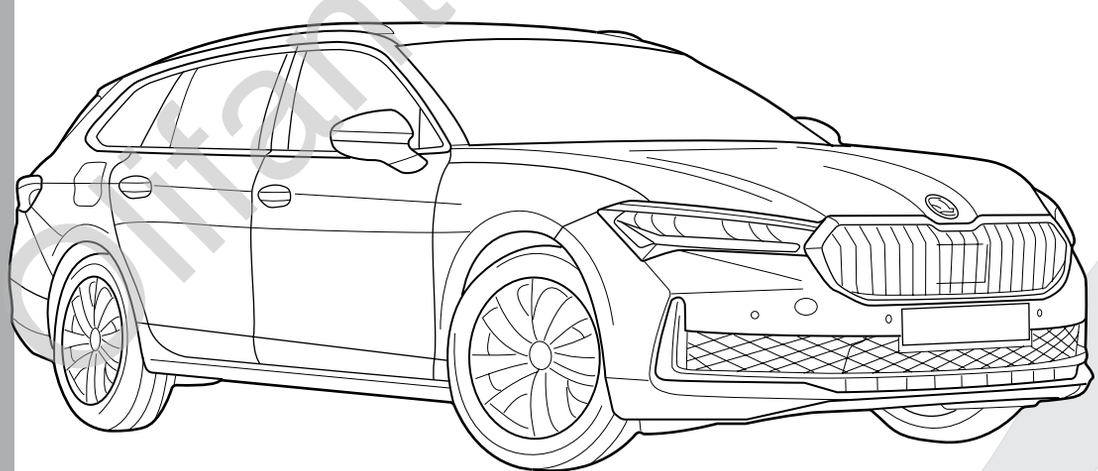

SCAN FOR THE
LATEST VERSION

Origineel Trekhaken

Gdw nv. Hoogmolenwegel 23 | B | 8790 Waregem | T +32 (0)56 60 42 12 | F +32 (0)56 60 01 93 | gdw@gdwtowbars.com | www.gdwtowbars.com

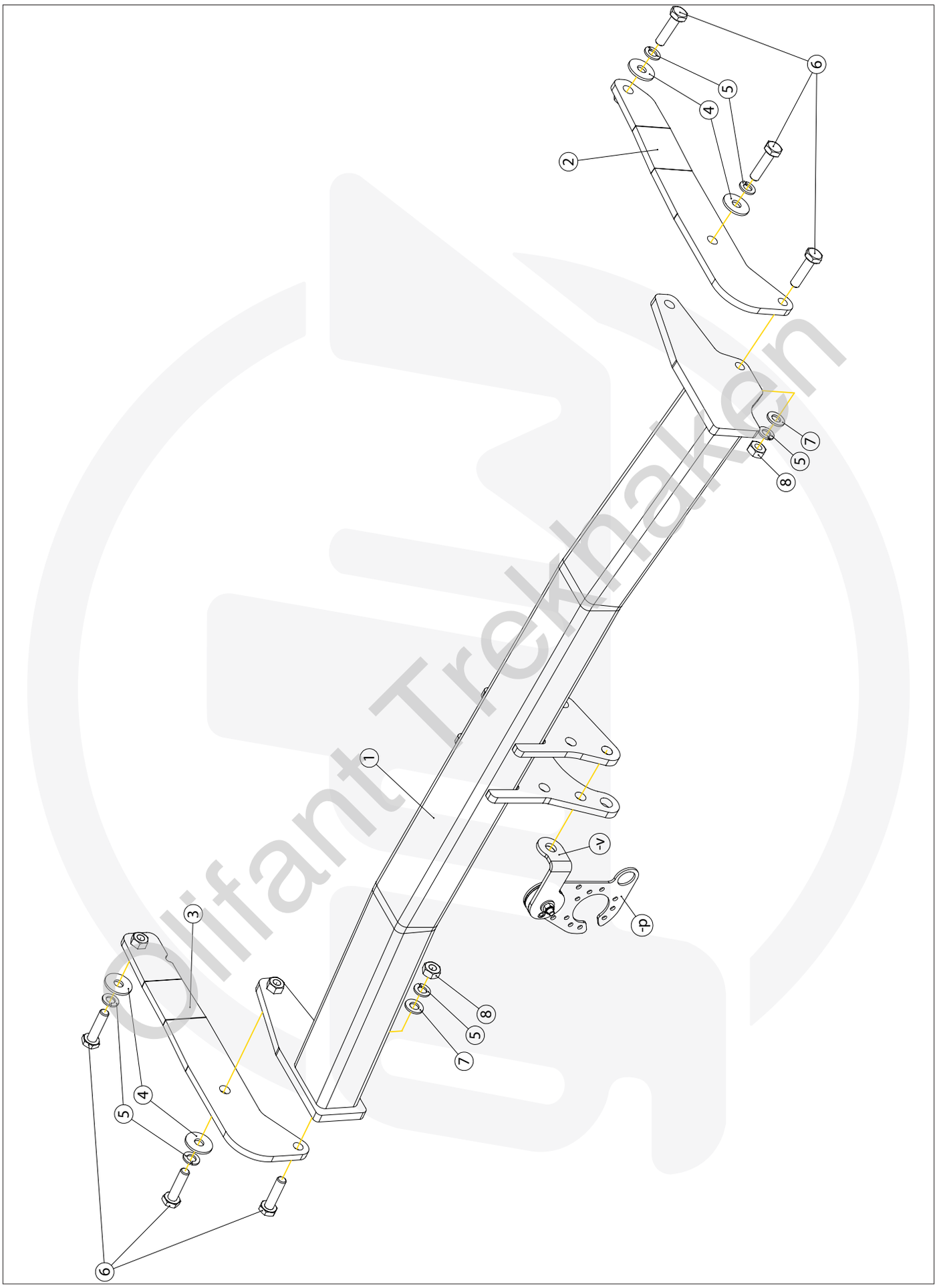

Olifant Trekhaken

1	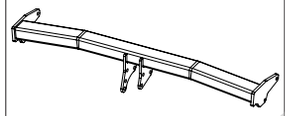	X1	GDW REF. 2848T60
2	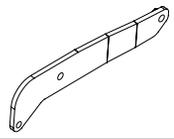	X1	GDW REF. 2
3	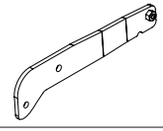	X1	GDW REF. 3
4		X4	DIN 9021-10.5X30X2.5
5		X6	GROWER VSK-M10
6		X6	DIN 933-M10X40
7		X2	DIN 125A-10.5X20X2
8		X2	DIN934-M10
-V	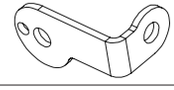	X1	GDW REF. 908.101

-P	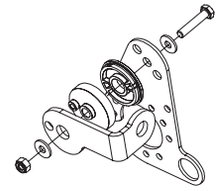	X1	GDW REF. P46
↳	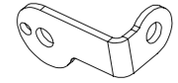	X1	GDW REF. 908.101
↳		X1	DIN985-M6
↳		X2	6,2 X 15,4 X 1,6 (NYLON)
↳		X1	GDW REF. 718.16.002
↳		X1	GDW REF. 718.16.003
↳		X1	GDW REF. 908.094
↳		X1	DIN933-M6 X 30

Geleverd met - Livré avec - Delivered with
Geliefert mit - Elementos adjuntos-Leveres med

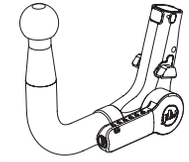	X1	REF. 960.V0406
↳ 	X1	GDW REF. 740.200
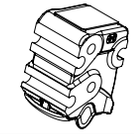	X1	GDW REF. 912.003
↳ 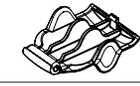	X1	GDW REF. 740.112
↳ 	X1	GDW REF. 740.111
	X1	GDW REF. 740.12X X=LAST NUMBER ON KEY
	X1	GDW REF. 718.15.001
	X1	GDW REF. SYST60-10
↳ 	X3	DIN931-M12X110-8.8
↳ 	X3	DIN128A-M12
↳ 	X6	DIN125A-M12
↳ 	X3	DIN934-M12

Oliant Trekhaken

1

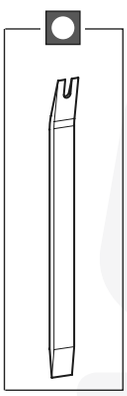

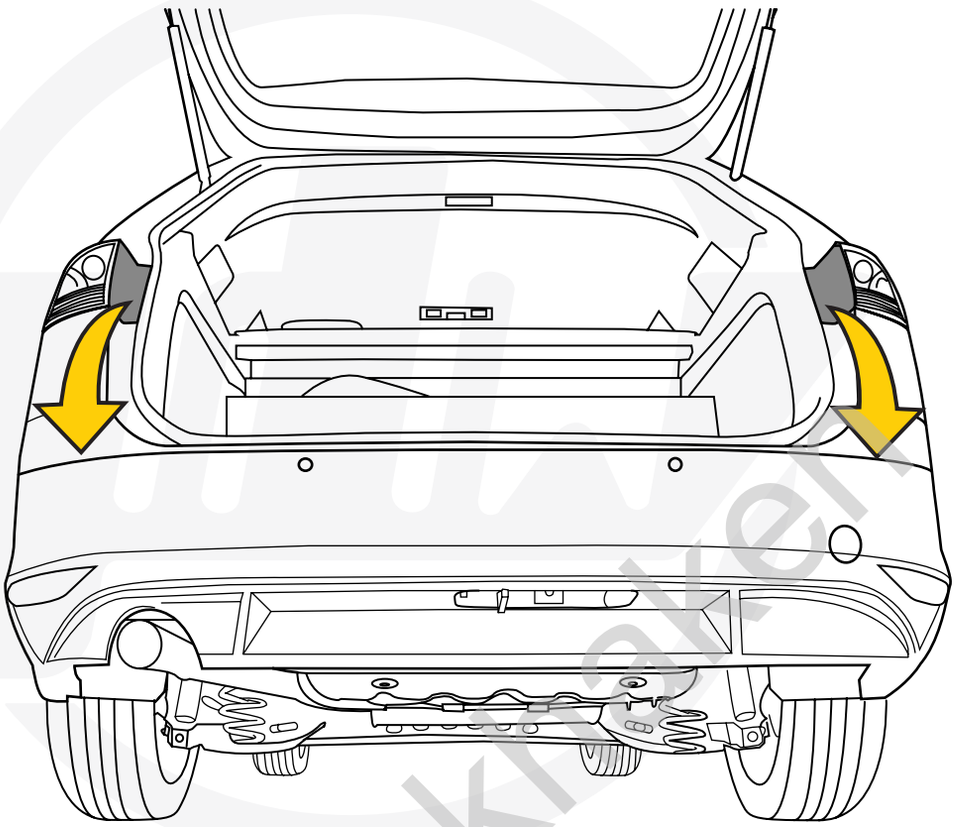

2

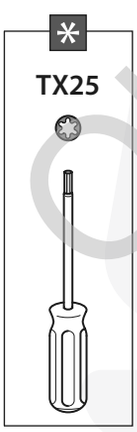

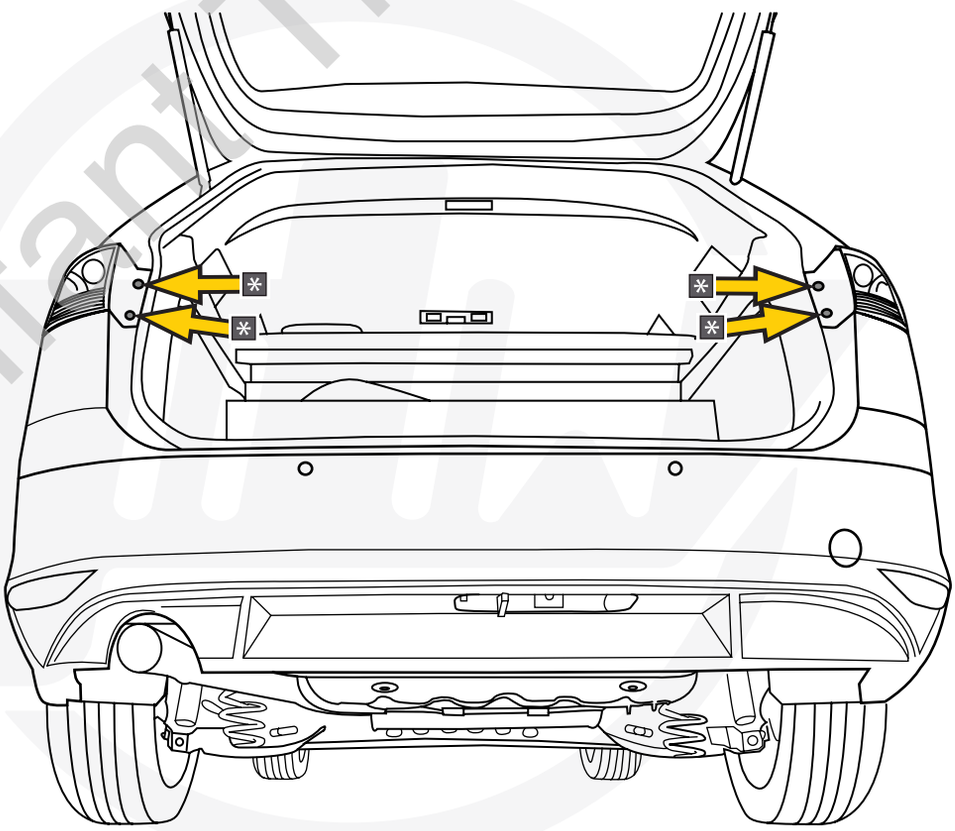

Olifant Trekhaken

3

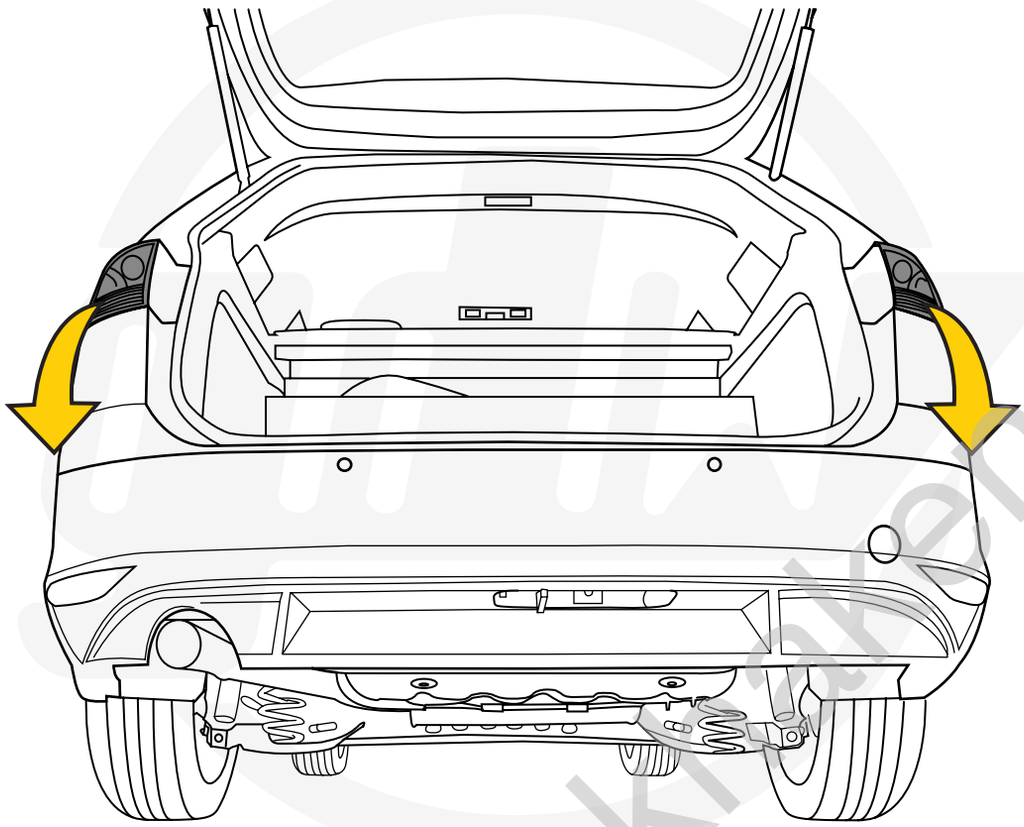

4

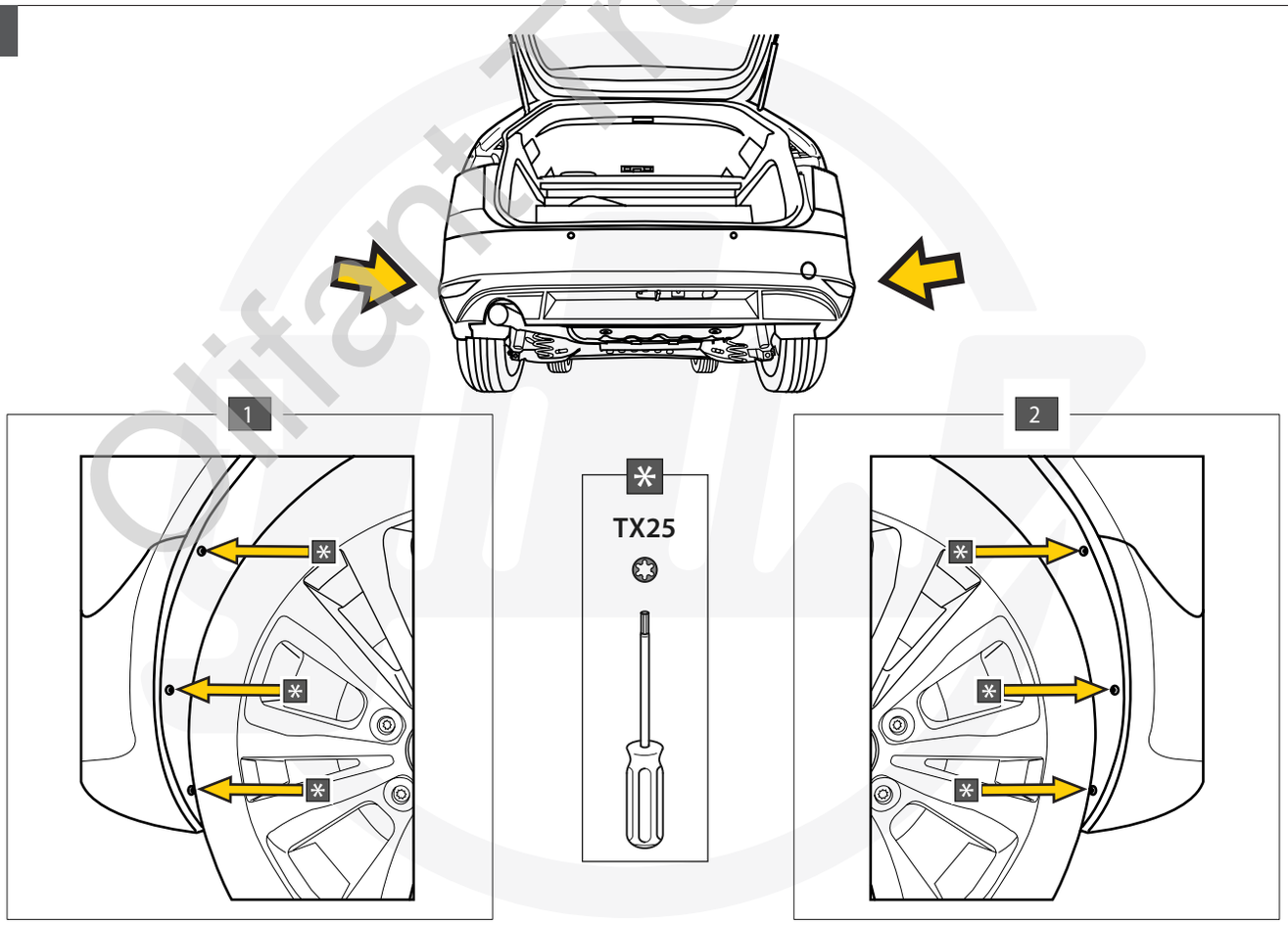

Oliftant Trekhaken

5

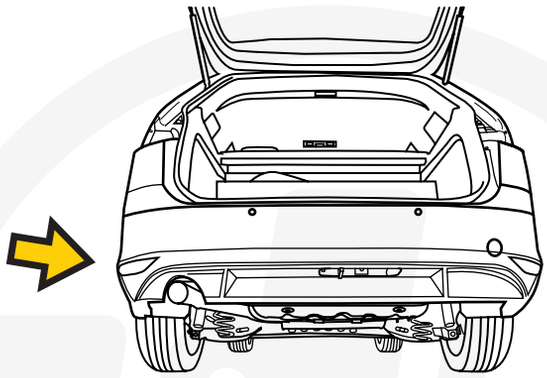

1

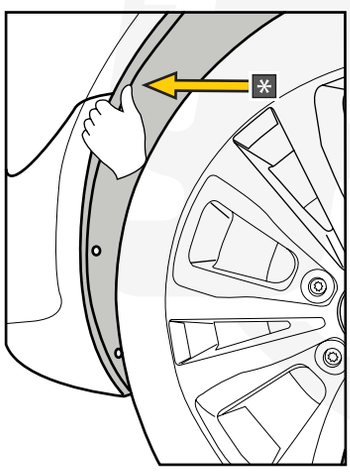



2

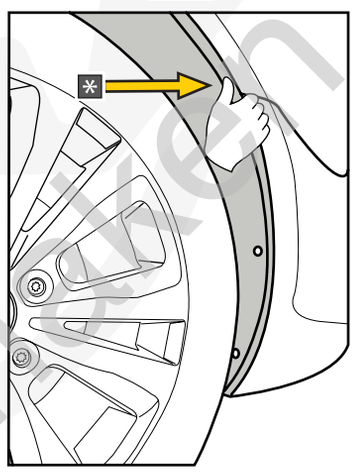

6

SKODA SUPERB

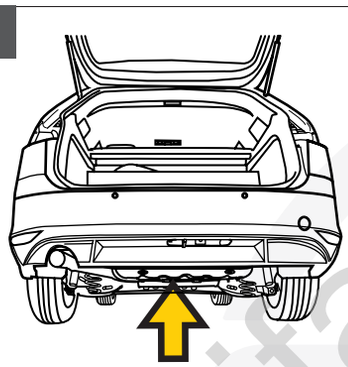

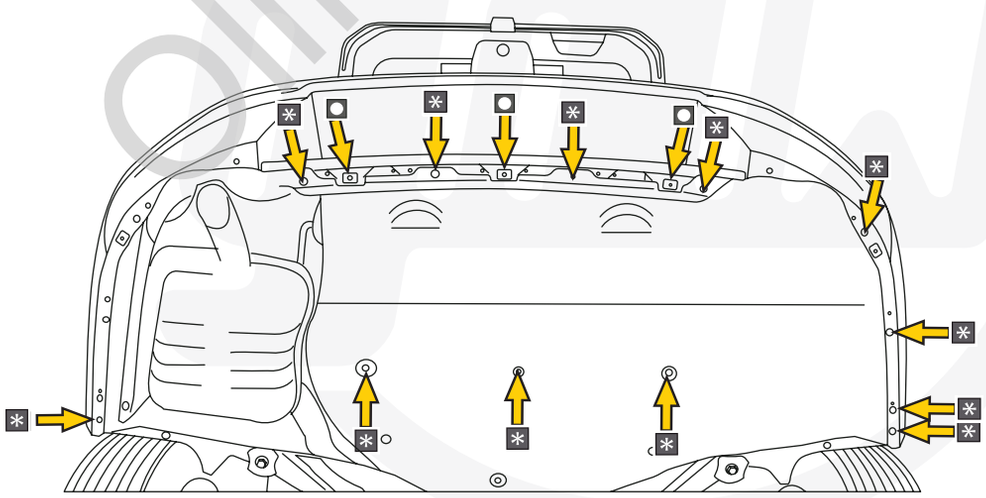

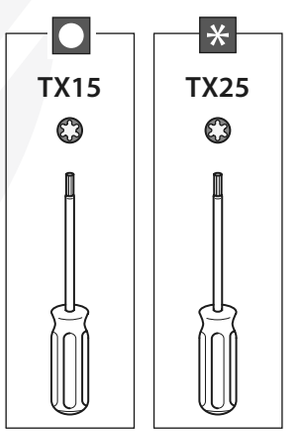

Olifant Trekhaken

7

VW PASSAT

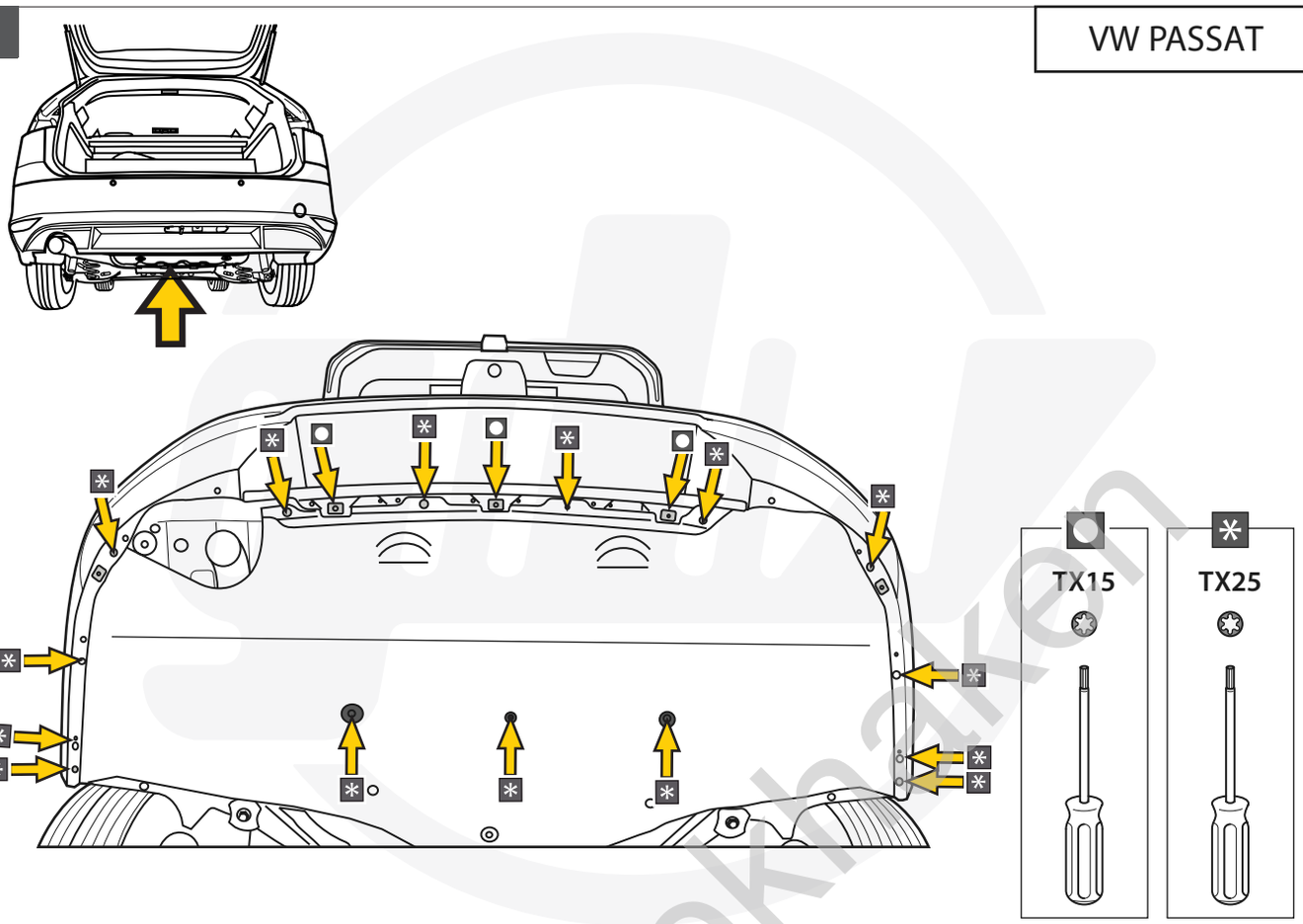

8

SKODA SUPERB

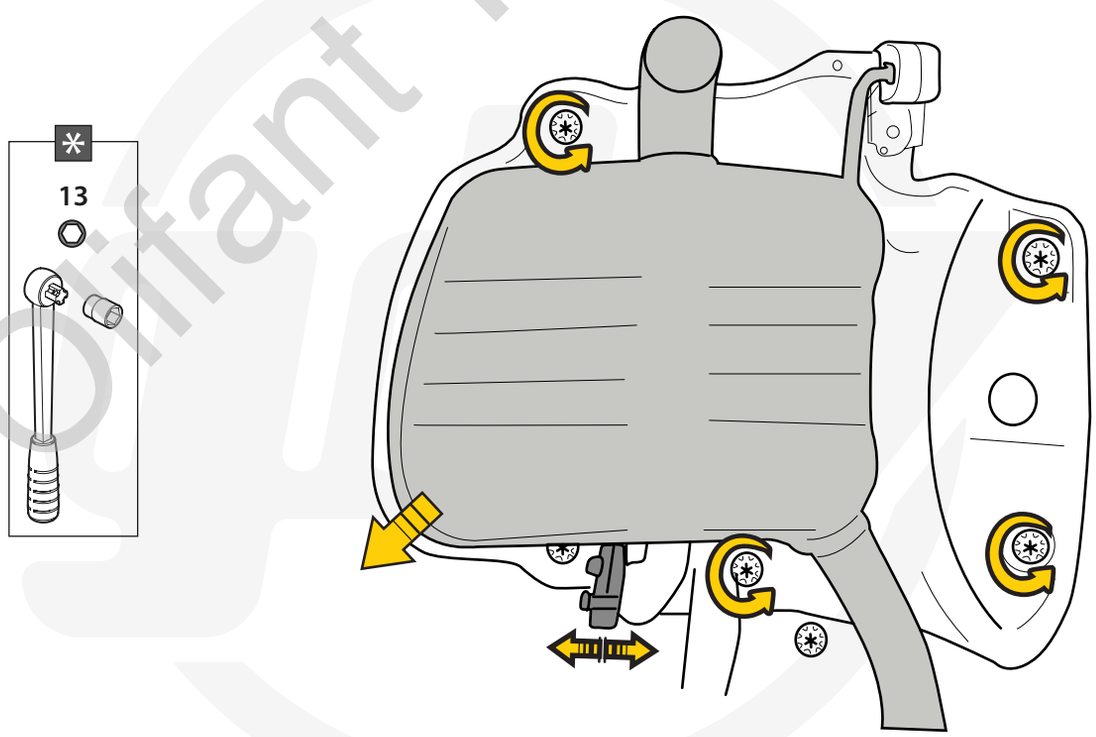

Oltant Trekhaken

9

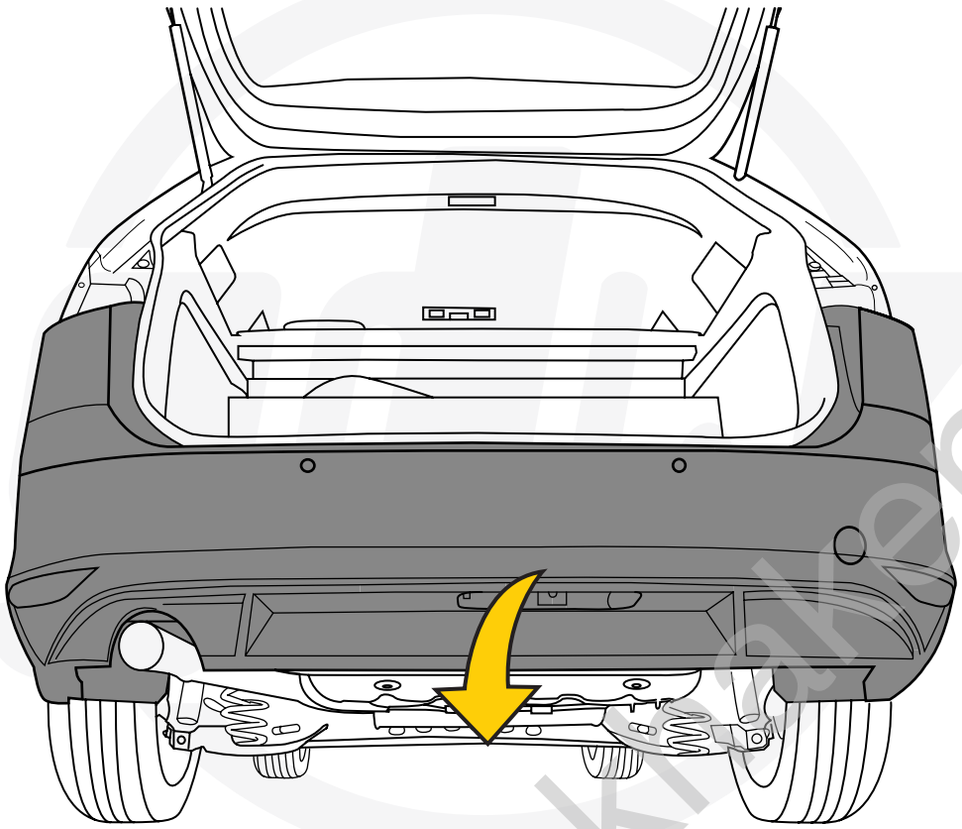

10

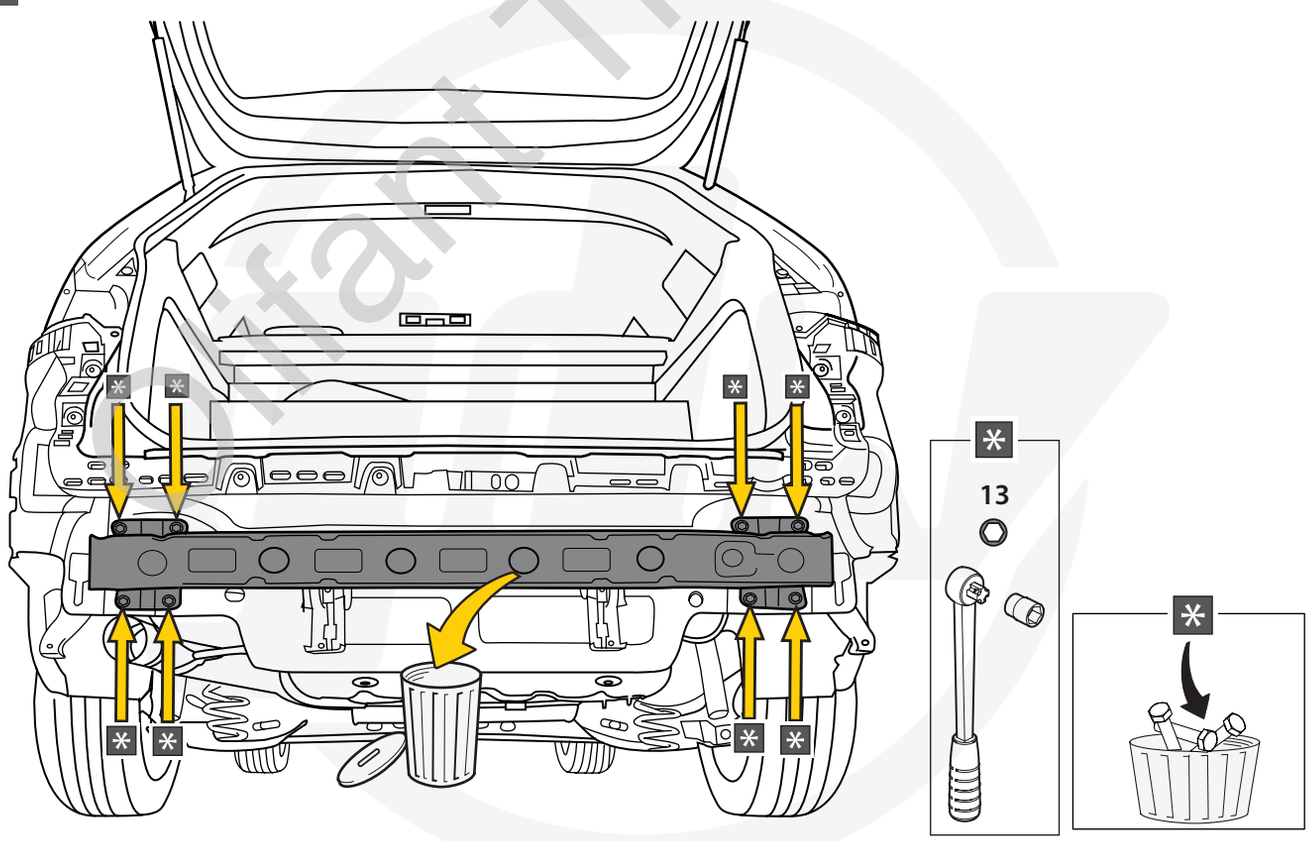

11

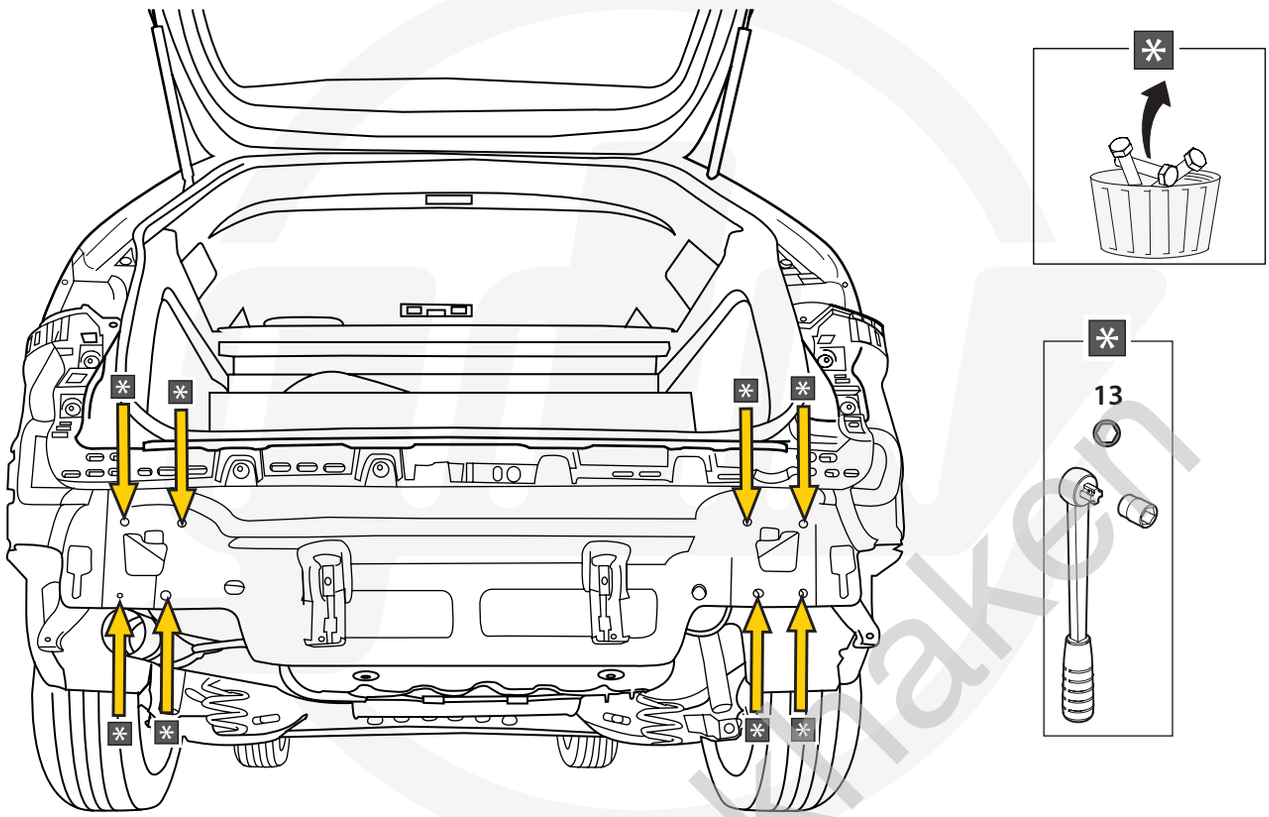

12

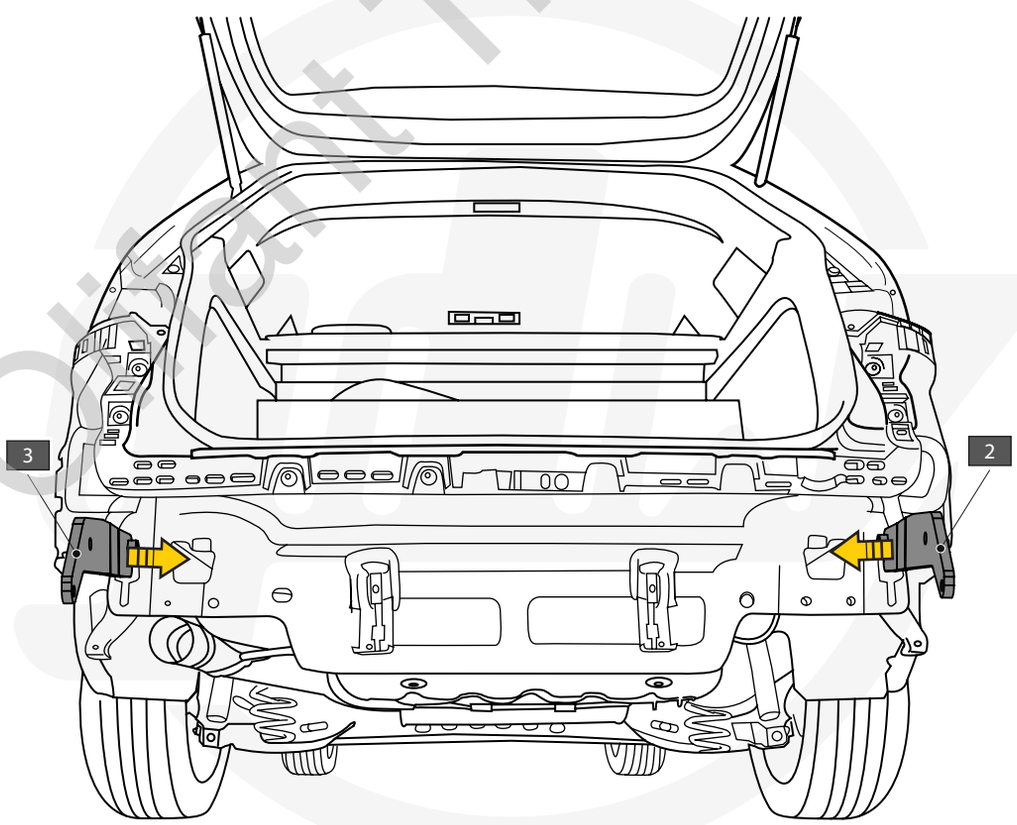

Quick Trek Maker

13

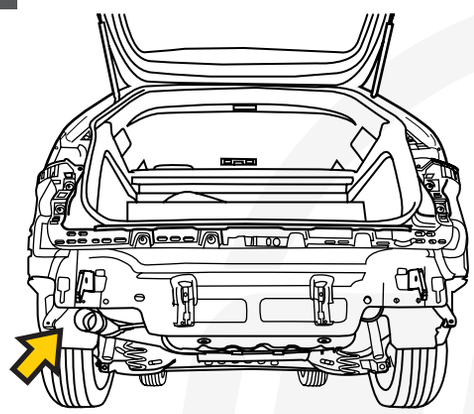



54,0 Nm

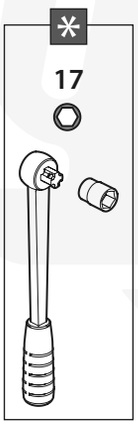

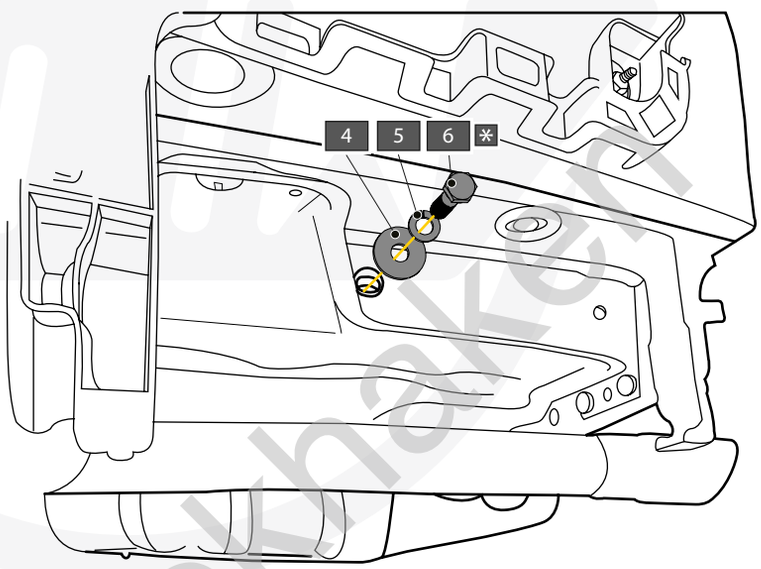

14

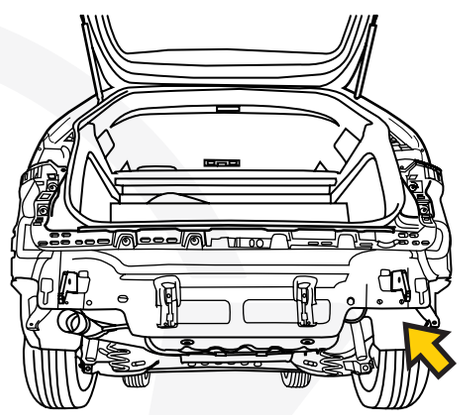

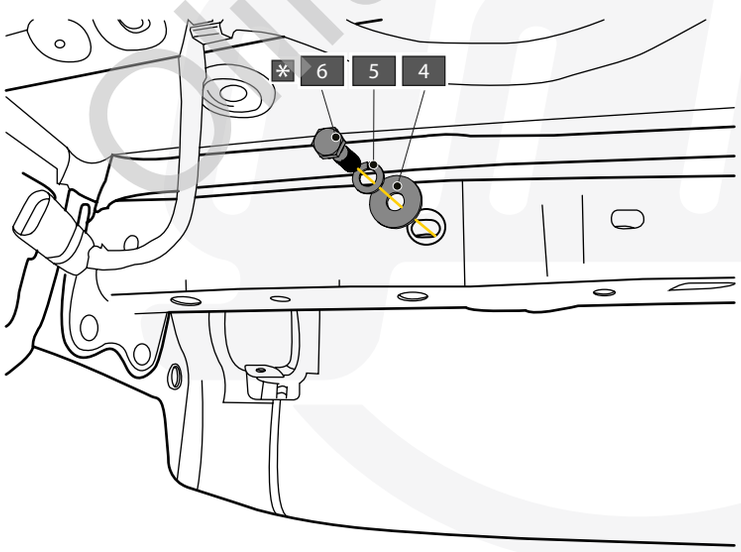

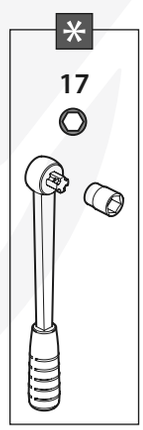



54,0 Nm

Quifant Trekhaken

15

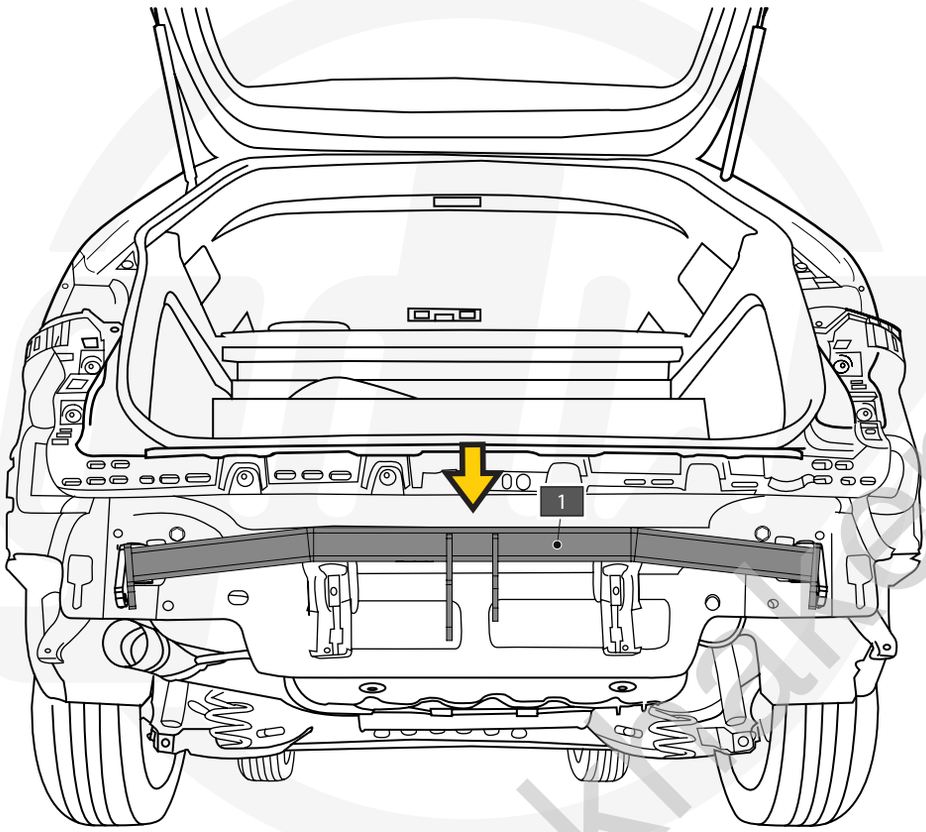

16

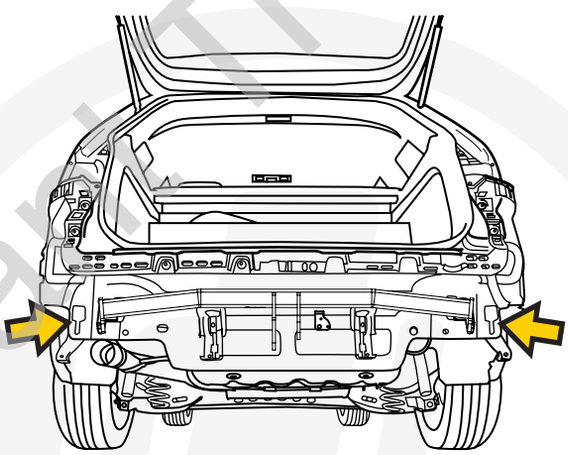

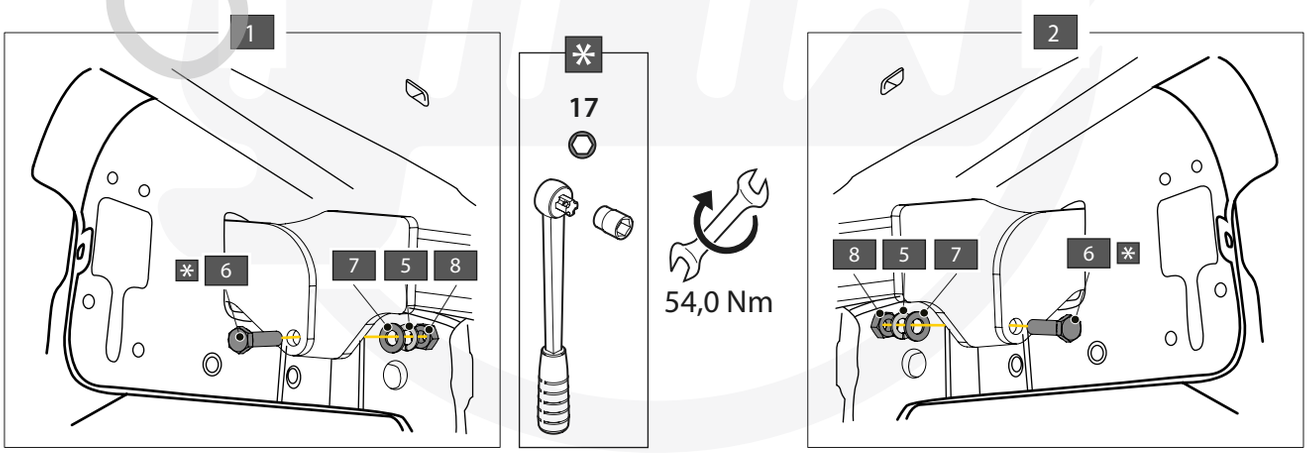

Olifant Trekhaken

17

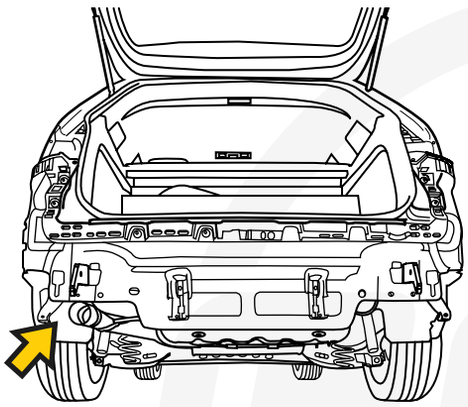

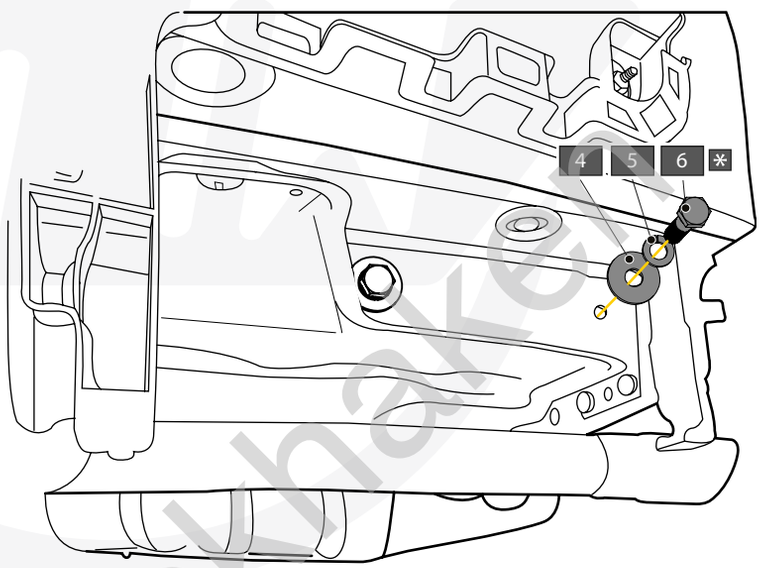

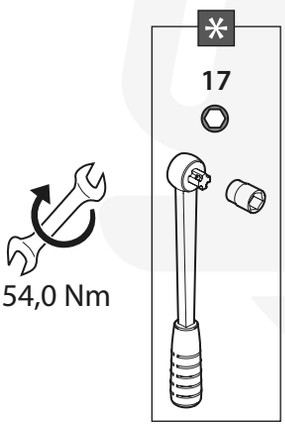

18

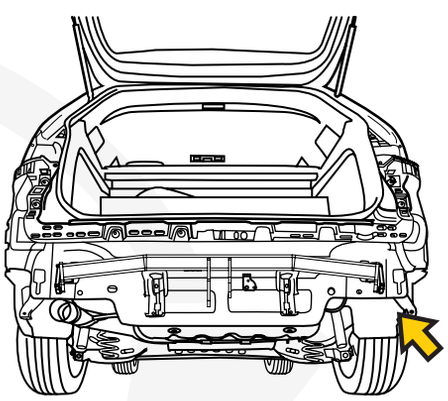

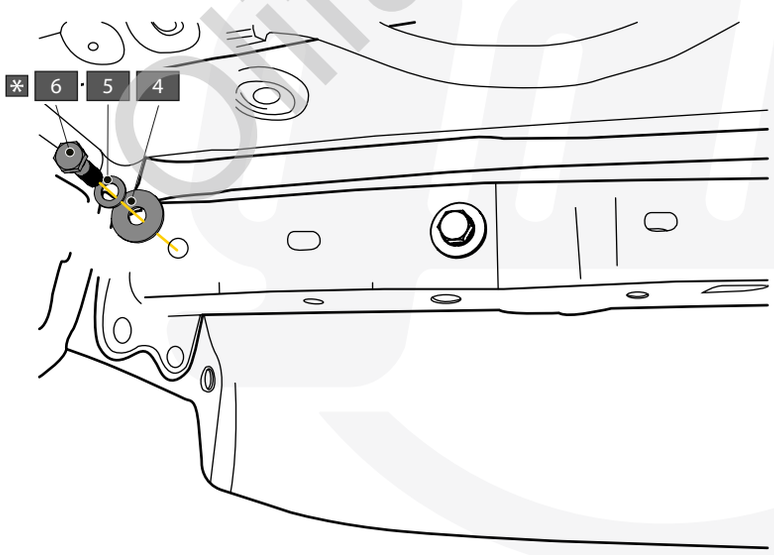

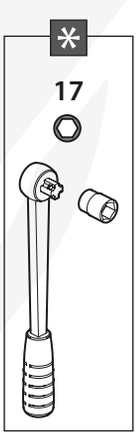



Elitant Trekhaken

19

SKODA SUPERB

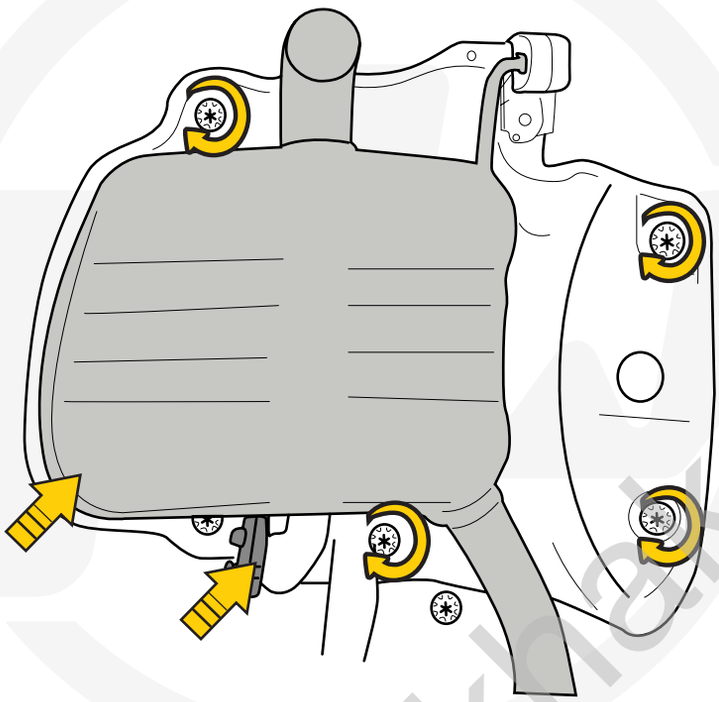

20

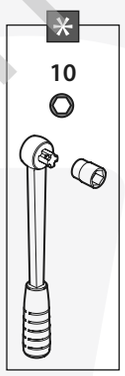



A	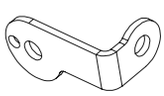	X1	GDW REF. 908.101
B		X1	DIN985-M6
C		X2	Ø15,4 X 6,2 X 1,6 (NYLON)
D		X1	GDW REF. 718.16.002
E		X1	GDW REF. 718.16.003
F	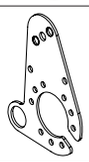	X1	GDW REF. 908.094
G		X1	DIN933-M6 X 30

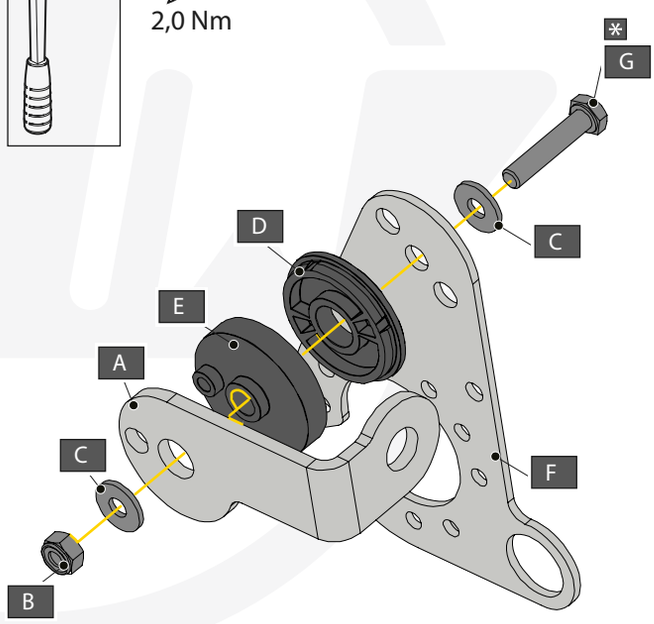

Oltant Trekhaken

21

For vehicles without preparation

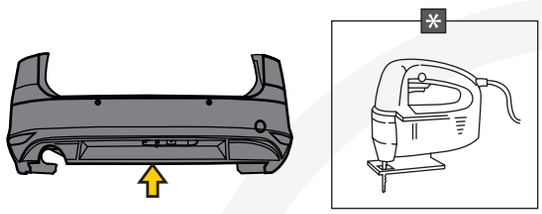

22

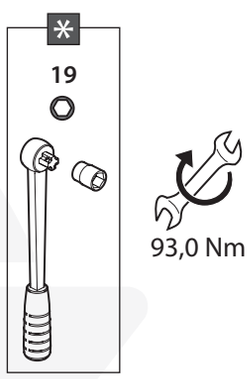

A		X1	GDW REF. 912.003
B		X3	DIN931-M12X110-8.8
C		X3	DIN128A-M12
D		X6	DIN125A-M12
E		X3	DIN934-M12

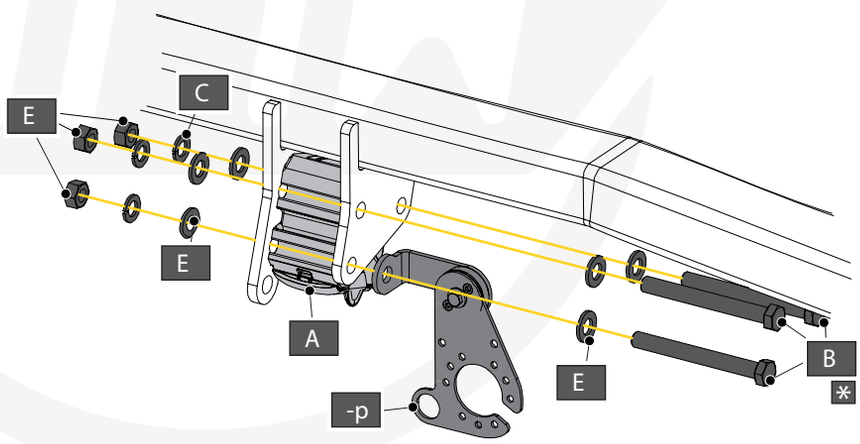

Olifant Trekhaken

23

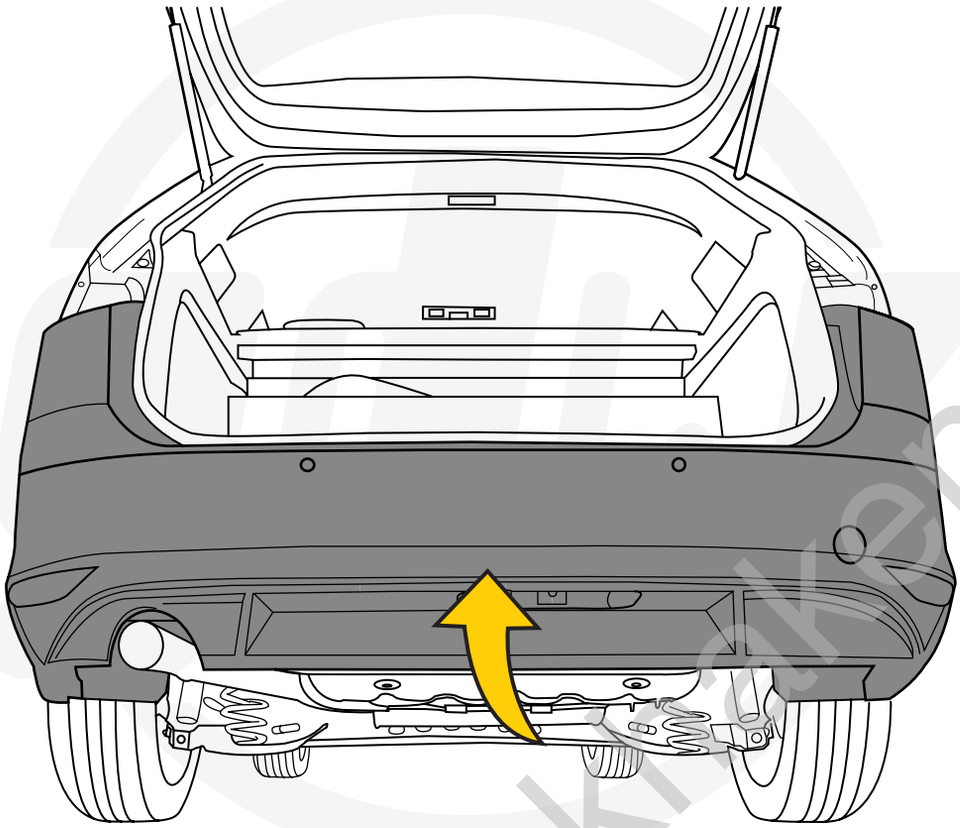

24

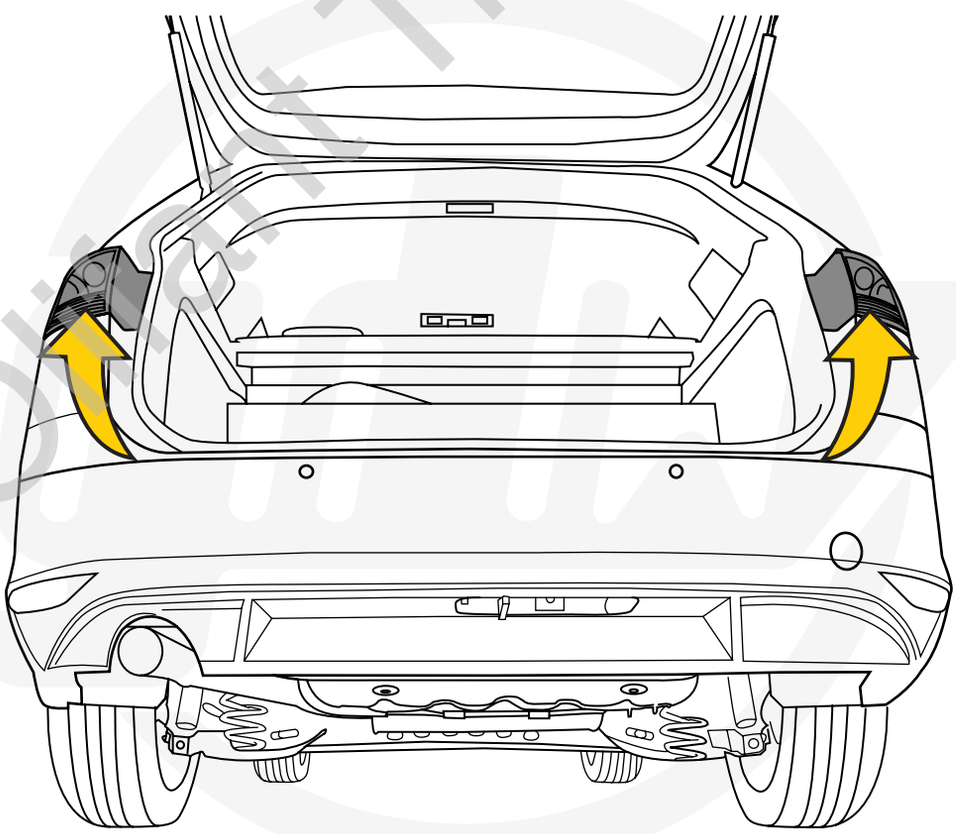

Quiet Trekraken