AUTO-HAK Sp. z o.o.
ul. Słoneczna 16K 76-200 SŁUPSK
POLAND
tel/fax +48 59 8 414 414; +48 59 8 414 413
e-mail: office@autohak.com.pl
www.autohak.com.pl

AUTO-HAK

TESLA MODEL Y

Nr kat.
TE01V

08.2021 → 12.2024
01.2025 →

E20 E20*55R02*6693

D 9,92 kN

kg R=1600 kg

S=158 kg

2h

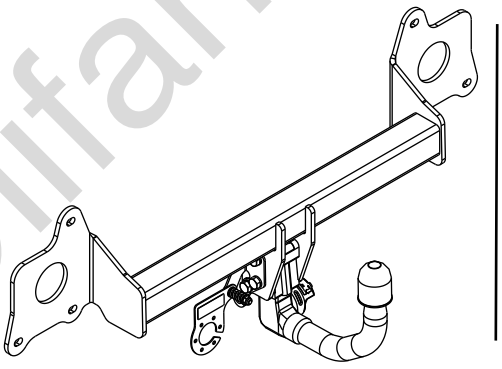

FULL VERSION INSTRUCTION

śruba / Nm	M6	M8	M10	M12	M14	M16
klasa 8.8	9,9	24	48	83	132	200
klasa 10.9	14	34	67	117	185	285

0 km → 1000 km

Olifant Trekhaken

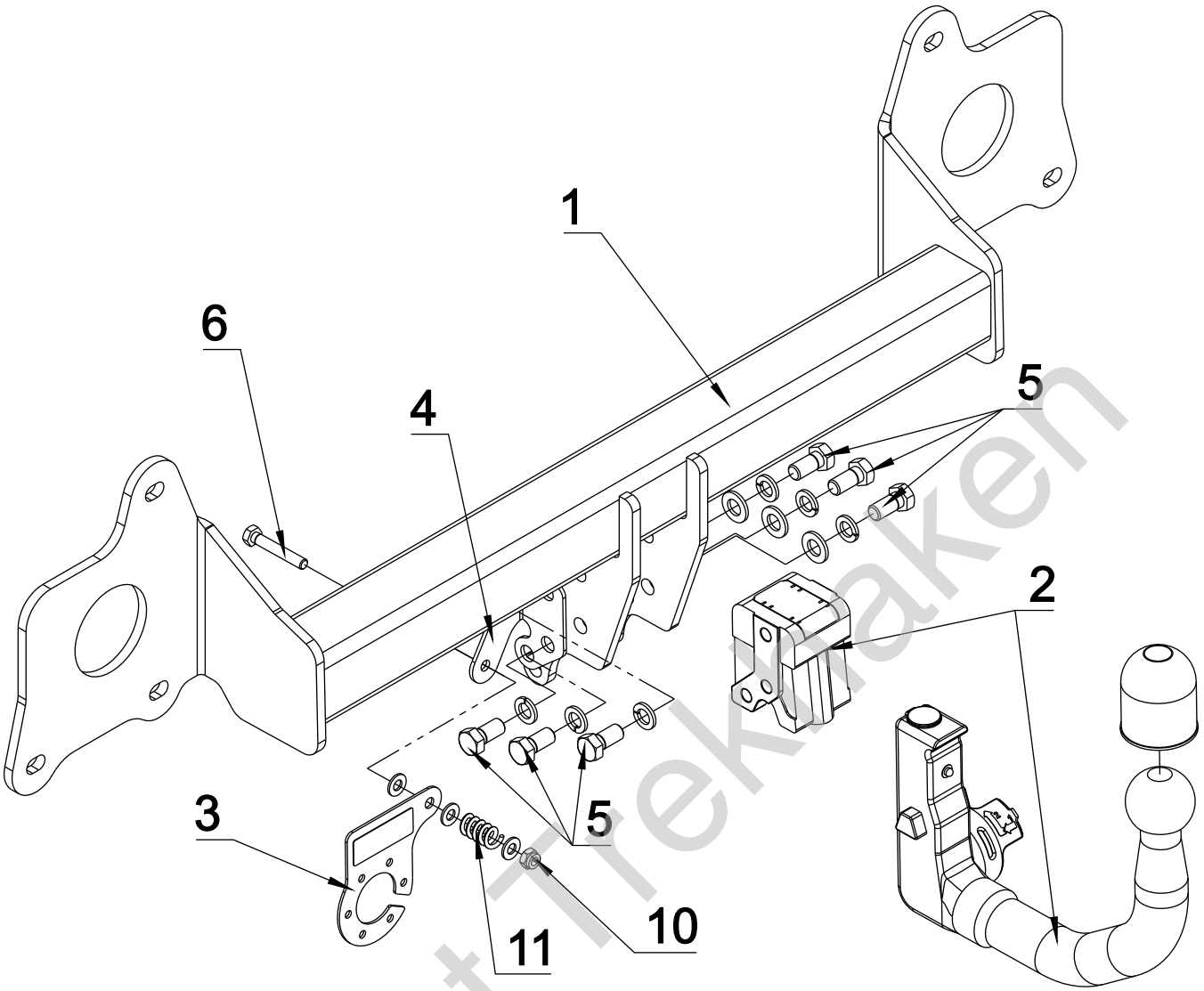

1	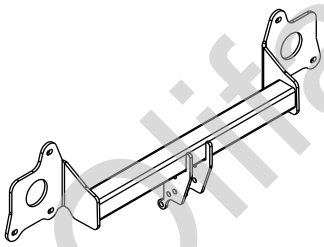	x 1
2	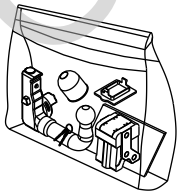 Art.nr-KL1TE01V	x 1
3	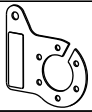 Art.nr-BL1TE01V	x 1
4		x 1

	5 M12x25	x 6
	6 M8x50	x 1
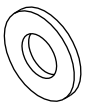	7 ø 13	x 3
	8 ø 8.4	x 3
	9 ø 12.2	x 2
	10 M8 (DIN985)	x 1
11 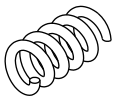		x 1

Olifant Trekhaken

01

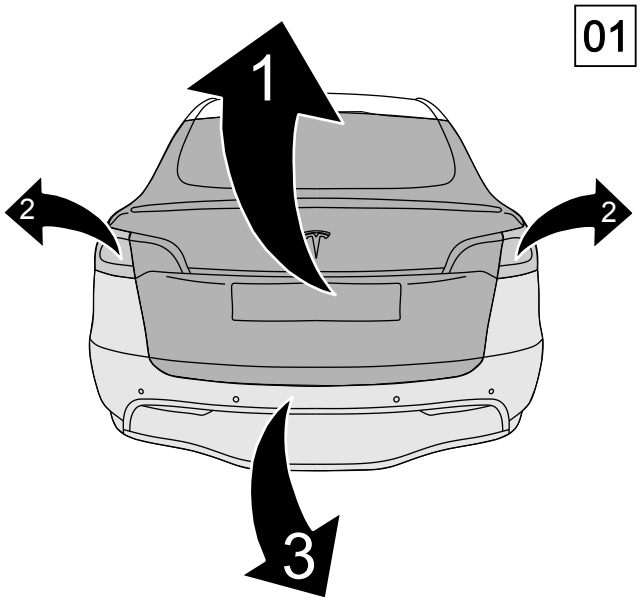

02

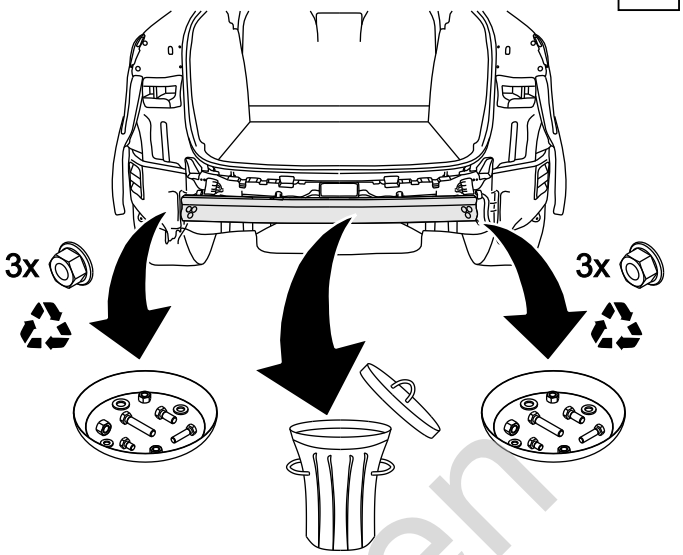

03

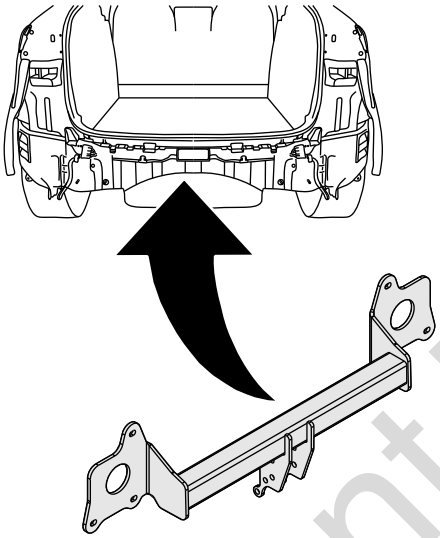

04

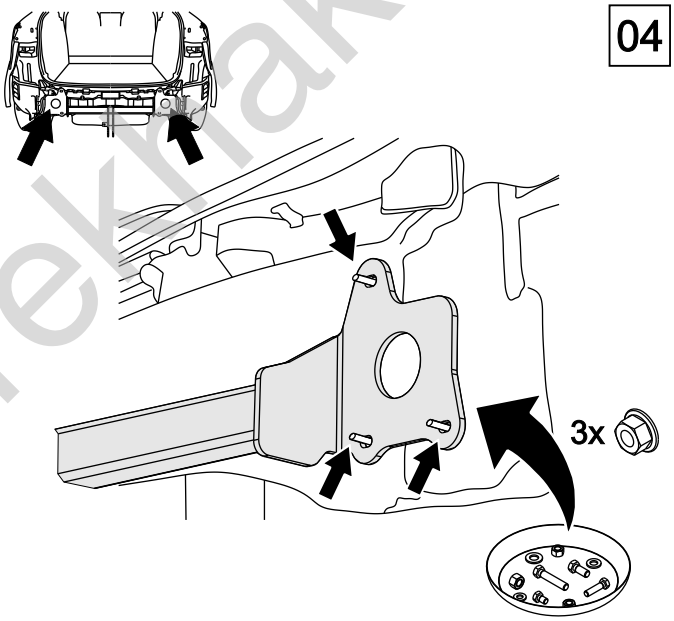

05

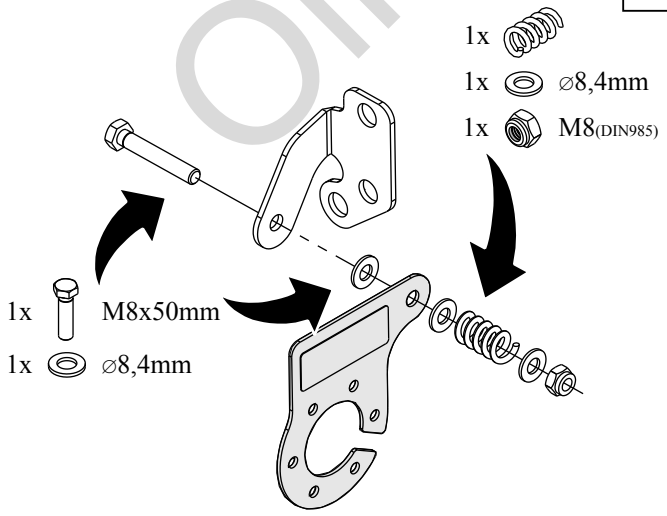

06

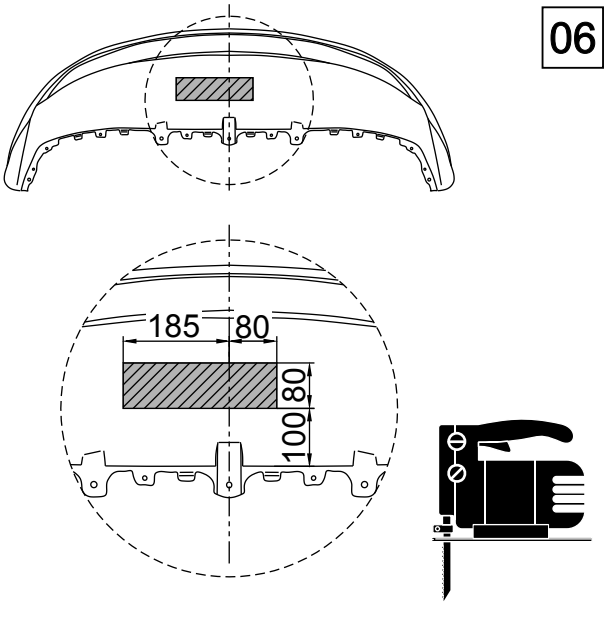

Olifant Trekhaken

07

6x M12x25mm

6x ⌀12,2mm

3x ⌀13mm

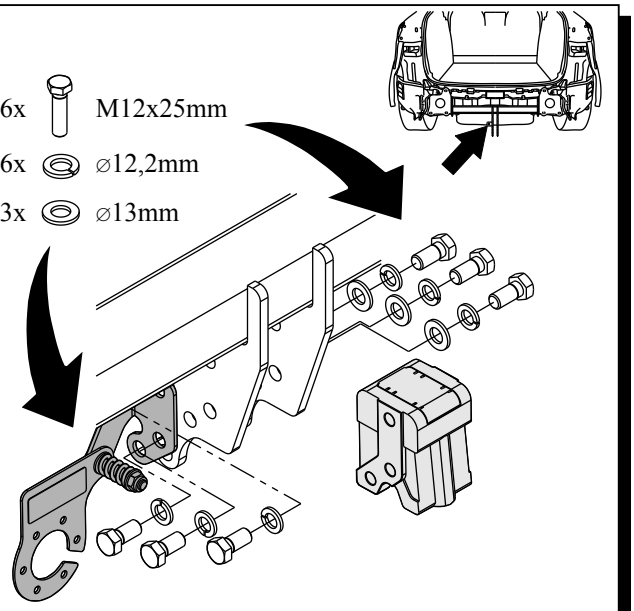

08

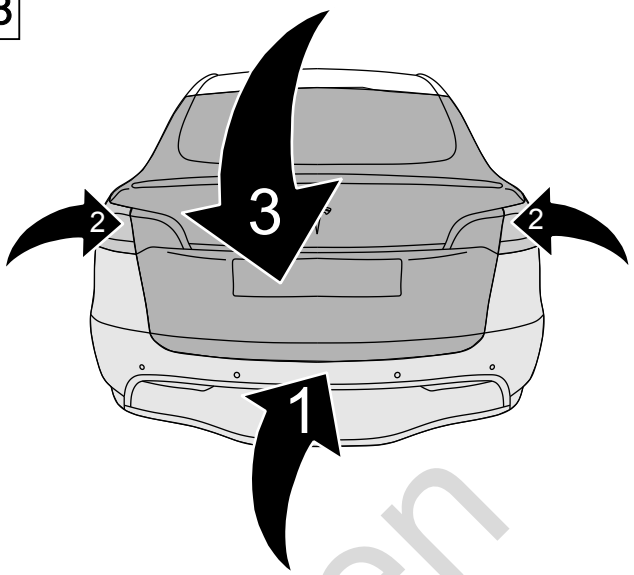

09

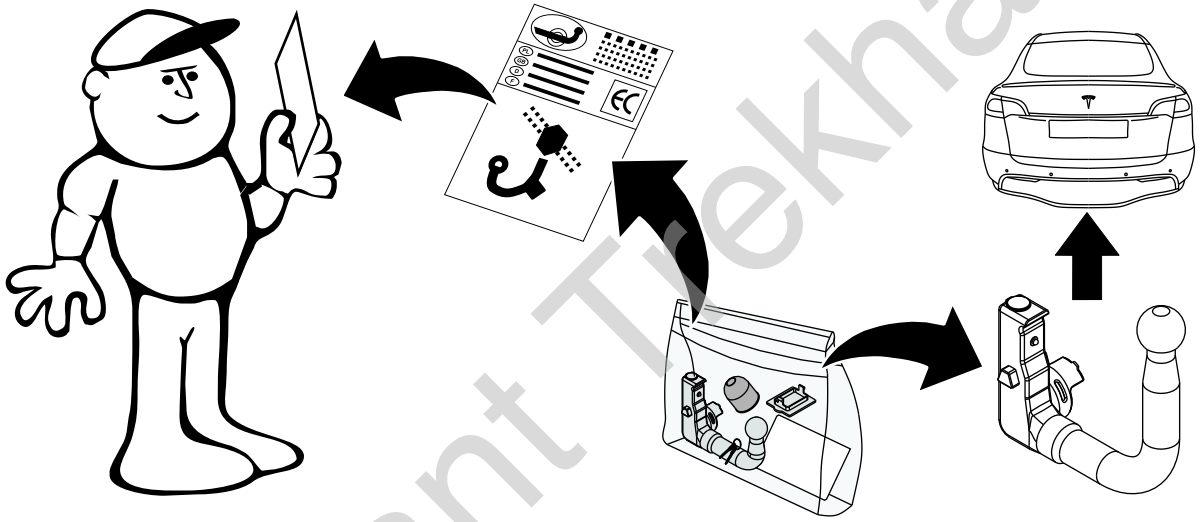

Olifant Trekhaken