AUTO-HAK Sp. z o.o.
ul. Słoneczna 16K 76-200 SŁUPSK
POLAND
tel/fax +48 59 8 414 414; +48 59 8 414 413
e-mail: office@autohak.com.pl
www.autohak.com.pl

AUTO-HAK

VOLKSWAGEN
T-CROSS (facelift)

Nr kat.
K85V

05.2023 →

E20 55R-03 7329

D 7,9 kN

R=1400 kg

S=75 kg

2h

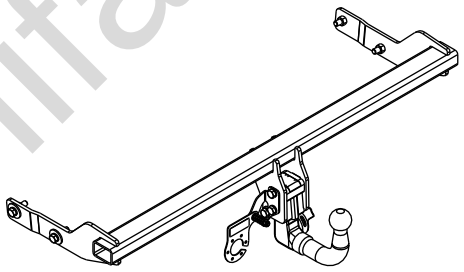

FULL VERSION INSTRUCTION

śruba / Nm	M6	M8	M10	M12	M14	M16
klasa 8.8	9,9	24	48	83	132	200
klasa 10.9	14	34	67	117	185	285

0 km → 1000 km

Olifant Trekhaken

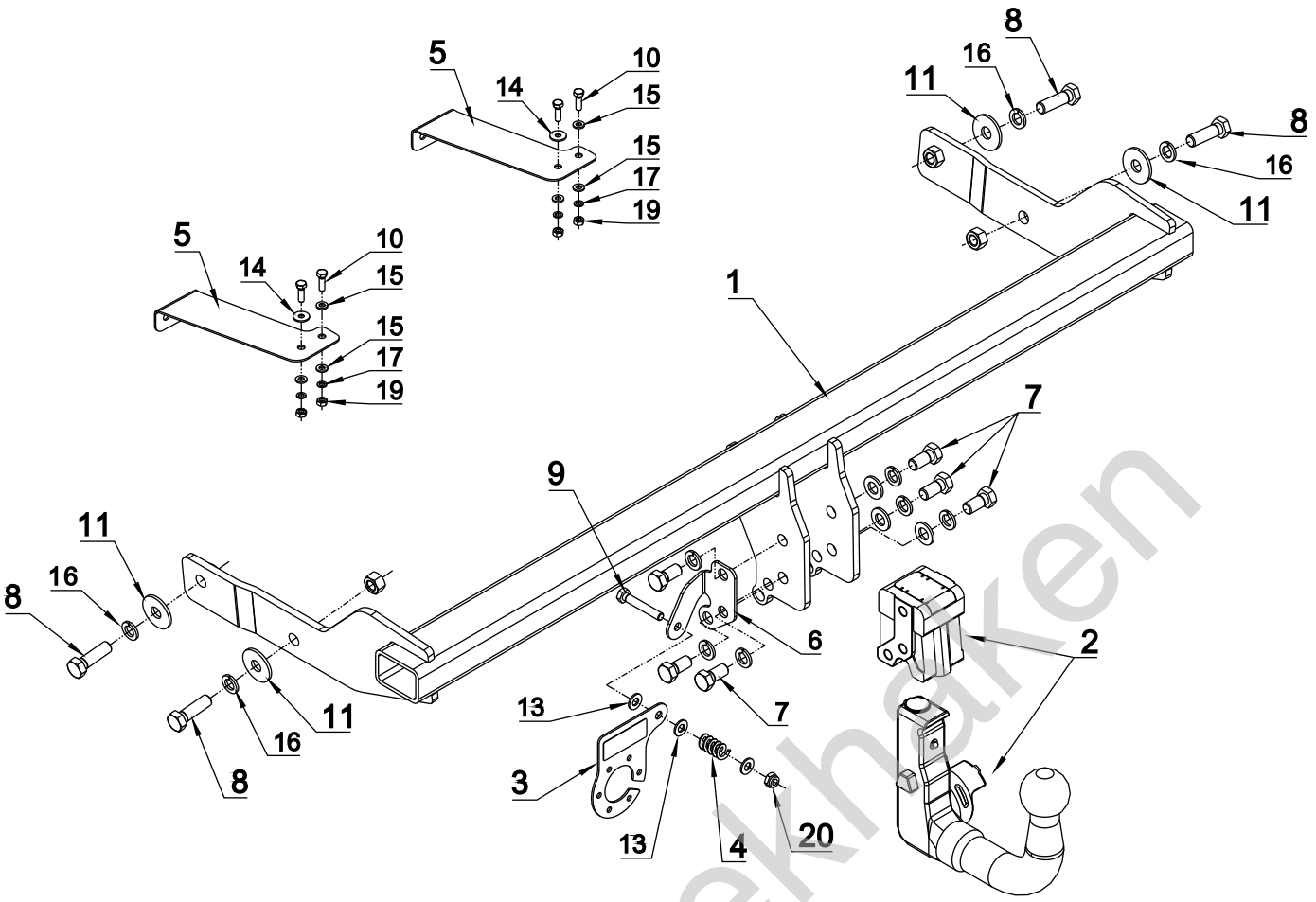

1	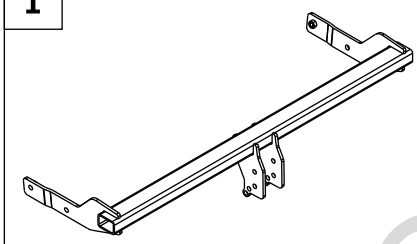	x 1		7	M12x25	10.9	6
				8	M12x40	10.9	4
				9	M8x50	8.8	1
				10	M6x20	8.8	4
2	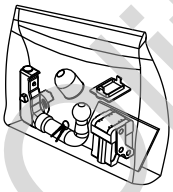	x 1		11	ø 37xø13x3 13 (DIN 9021)	x 4	
	Art.nr-KL1K85V			12	ø 13	x 3	
				13	ø 8.4	x 3	
3	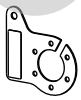	x 1		14	ø 18xø6.4x1.6 6 (DIN 9021)	x 4	
	Art.nr-BL12K85V			15	ø 6.4	x 6	
4		x 1		16	ø 12.2	x 10	
				17	ø 6.1	x 2	
5	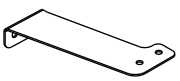	x 2		18	M12	x 2	
				19	M6	x 2	
6		x 1		20	M8 (DIN985)	x 1	

Olifant Trekhaken

01

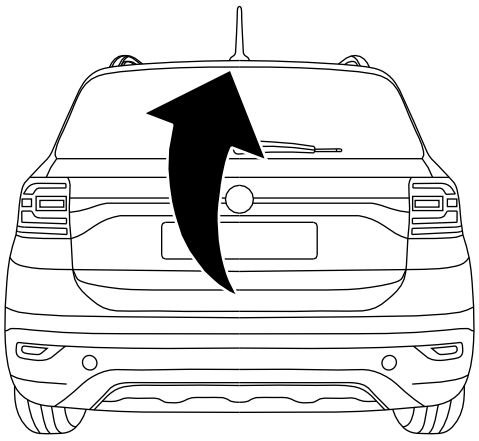

02

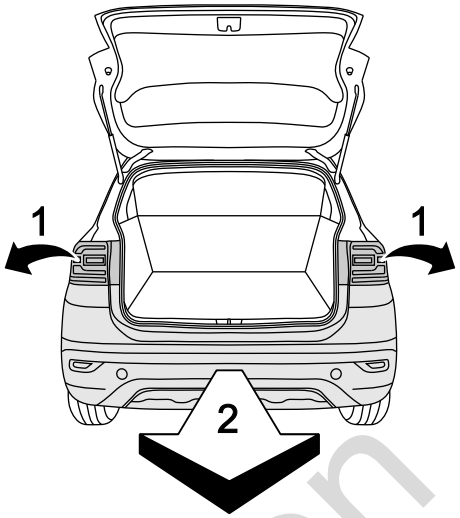

03

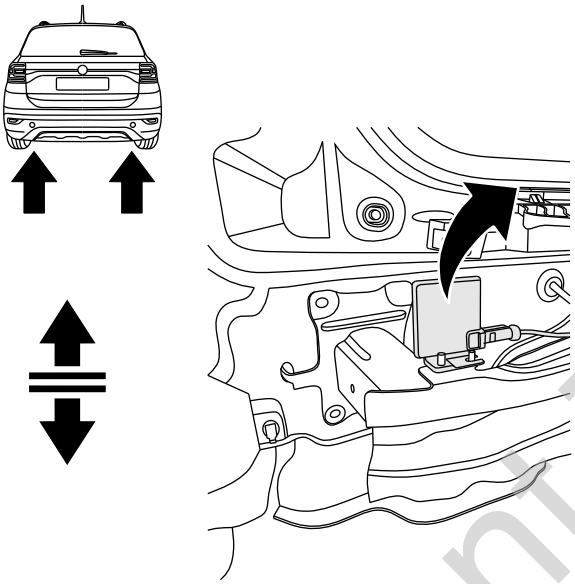

04

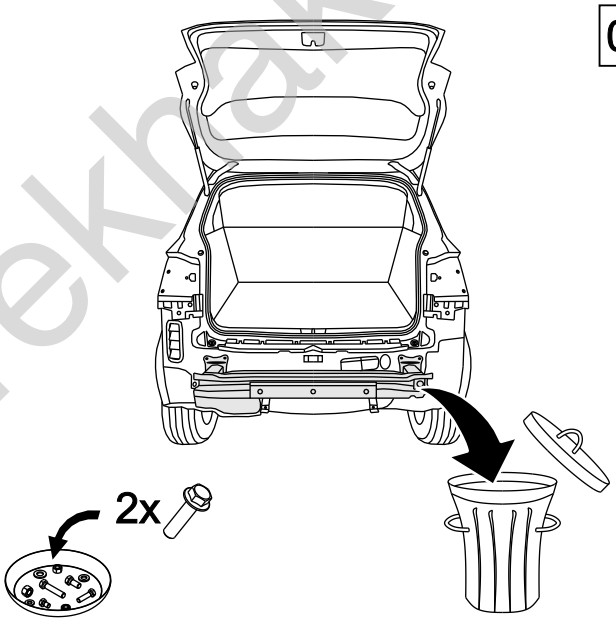

05

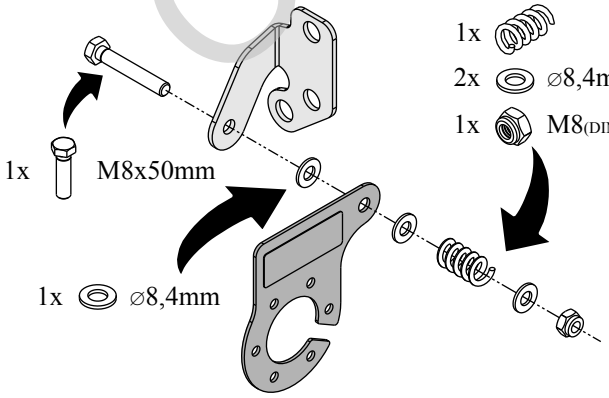

06

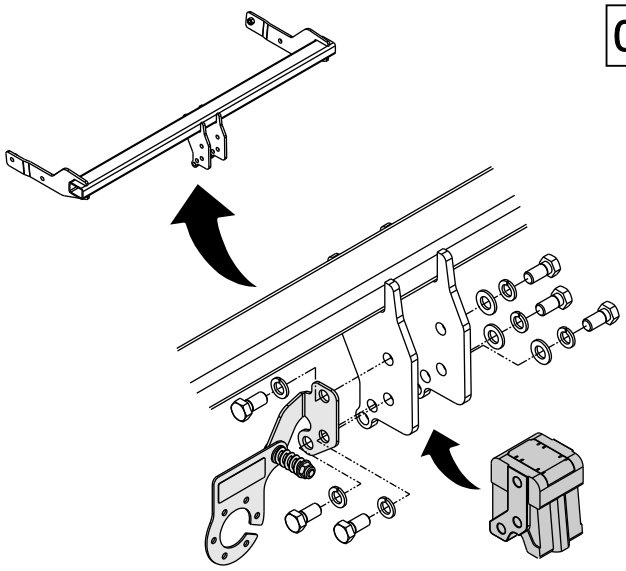

Olifant Trekhaken

07

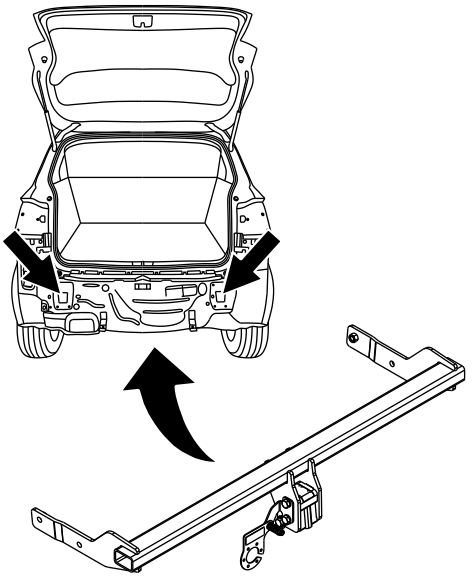

08

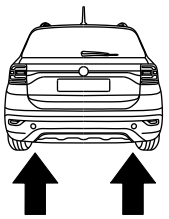

1x M12

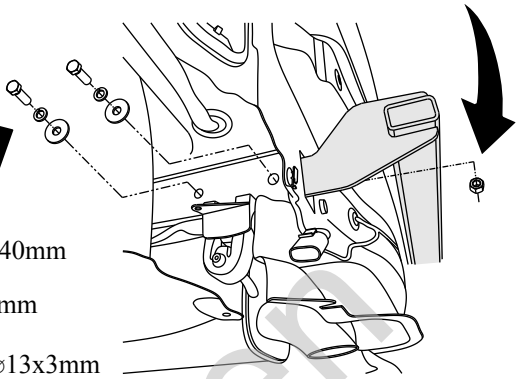

2x M12x40mm

2x ⌀12,2mm

2x ⌀37x⌀13x3mm

09

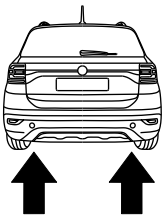

2x

10

1x M6x20mm

1x ⌀18x⌀6,4x1,6mm



1x M6x20mm

1x ⌀6,4mm

2x ⌀6,4mm

2x ⌀6,1mm

2x M6

11

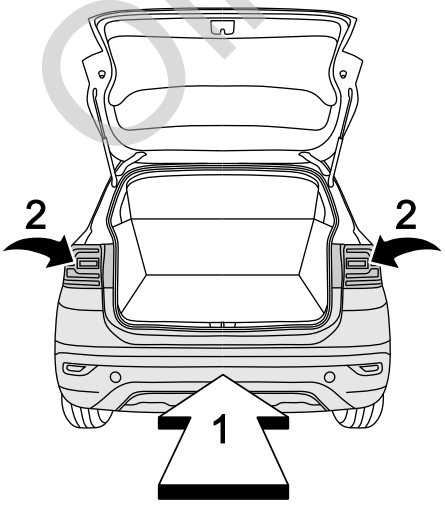

12

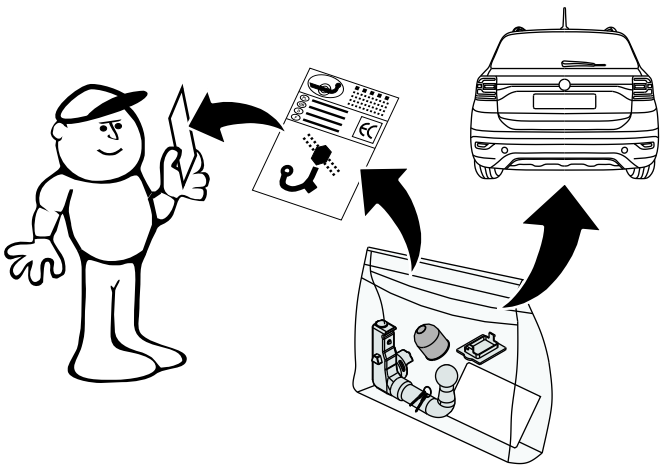

Olifant Trekhaken