AUTO-HAK Sp. z o.o.
ul. Słoneczna 16K 76-200 SŁUPSK
POLAND
tel/fax +48 59 8 414 414; +48 59 8 414 413
e-mail: office@autohak.com.pl
www.autohak.com.pl

AUTO-HAK

MG HS

Nr kat.
MG02V

12.2020 → 2024

E20 E20*55R02*6910

D 9,3 kN

R=1750 kg

S=90 kg

2h

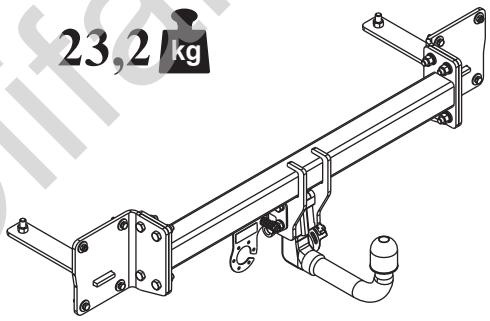

FULL VERSION INSTRUCTION

śruba / Nm	M6	M8	M10	M12	M14	M16
klasa 8.8	9,9	24	48	83	132	200
klasa 10.9	14	34	67	117	185	285

0 km → 1000 km

Oifant Trekhaken

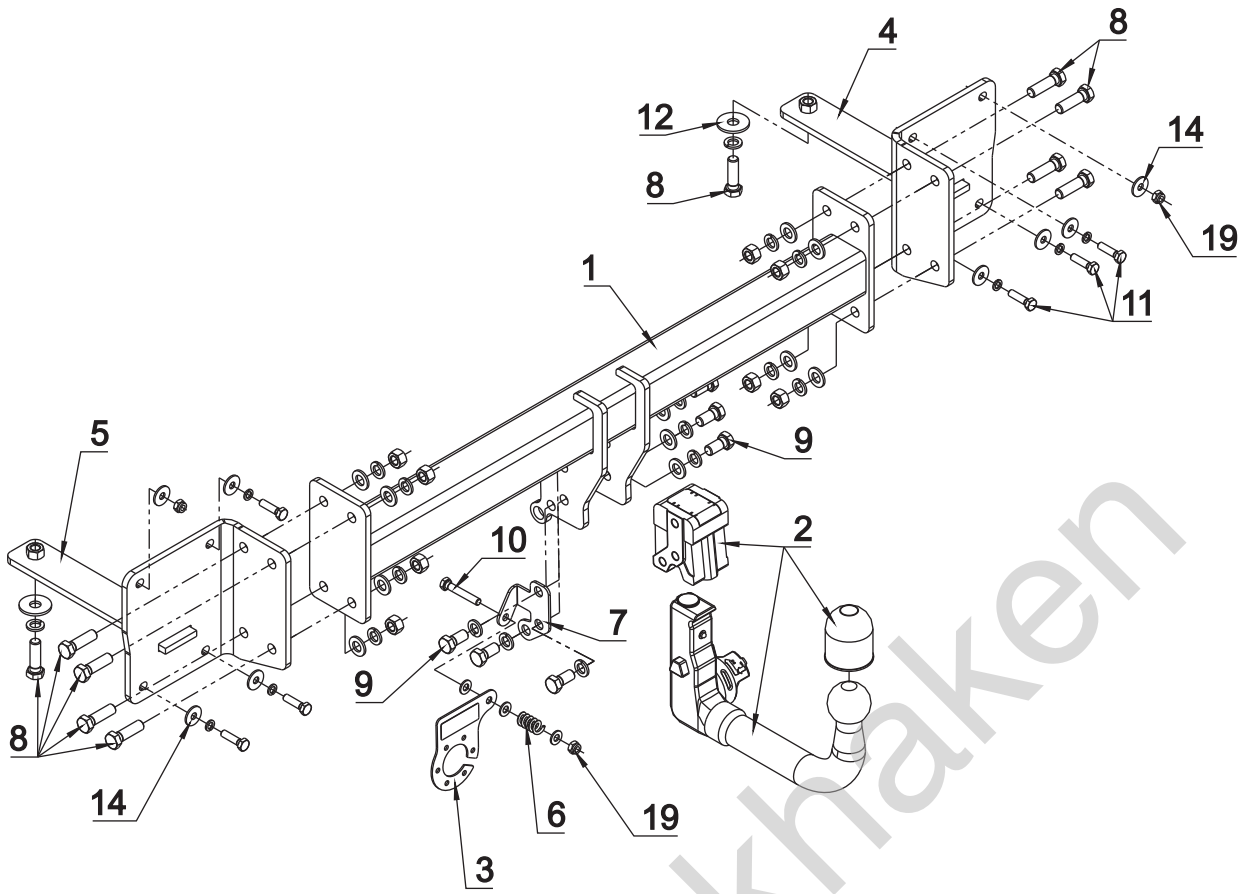

1	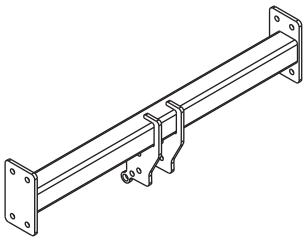	x 1		
2	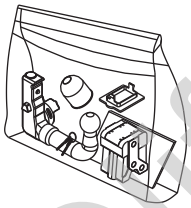 Art.nr-KL1MG02V	x 1		
3	 Art.nr-BL12MG02V	x 1		
4	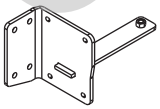	x 1		
5	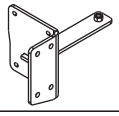	x 1		
6	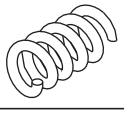	x 1		
7		x 1		

	8	M12x40	x 10
	9	M12x25	x 6
	10	M8x50	x 1
	11	M8x30	x 6
	12	ø 37xø13x3 13 DIN 9021	2
	13	ø 13	x 11
	14	ø 24xø8.4x2 8 DIN 9021	8
	15	ø 8.4	x 3
	16	ø 12.2	x 16
	17	ø 8.2	x 6
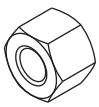	18	M12	x 8
	19	M8 (DIN985)	x 3

Olifant Trekhaken

01

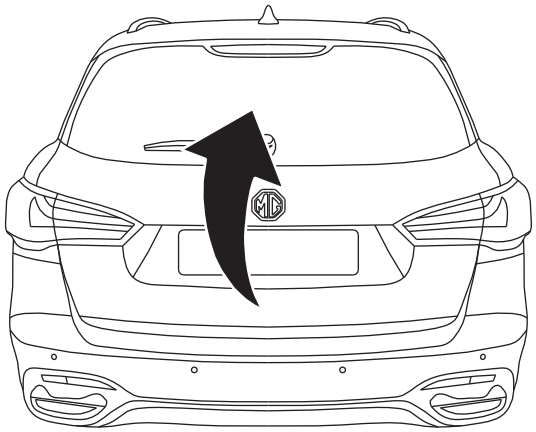

02

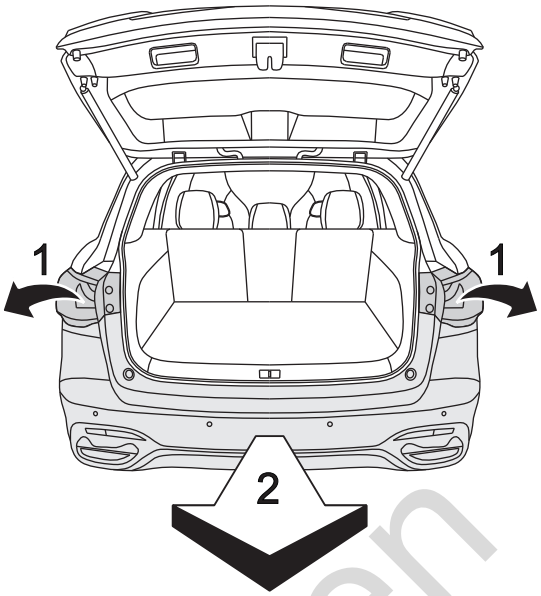

03

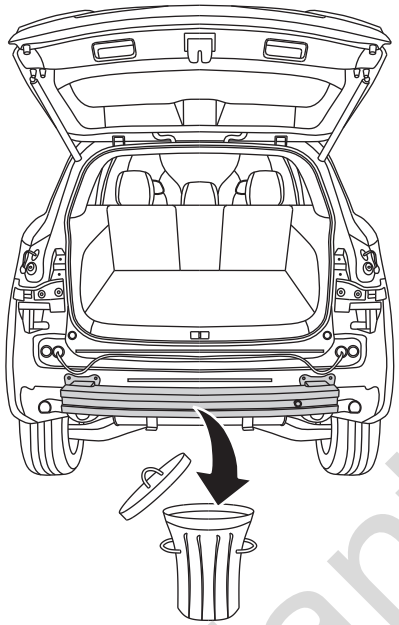

04

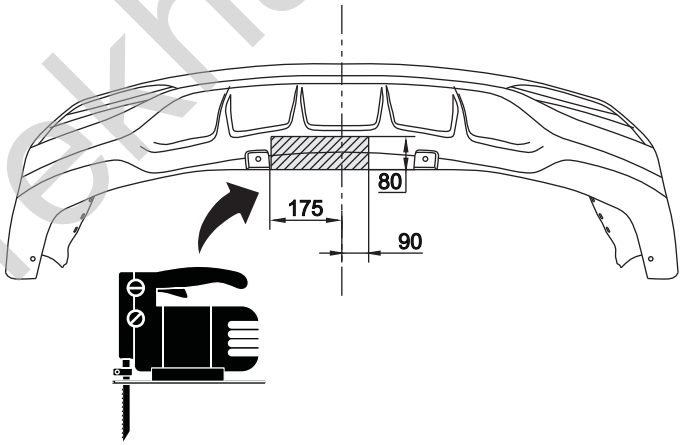

05

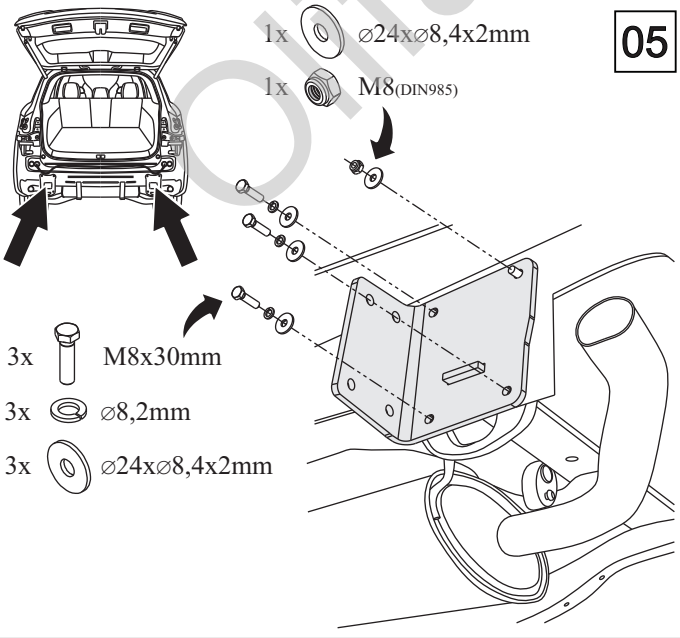

06

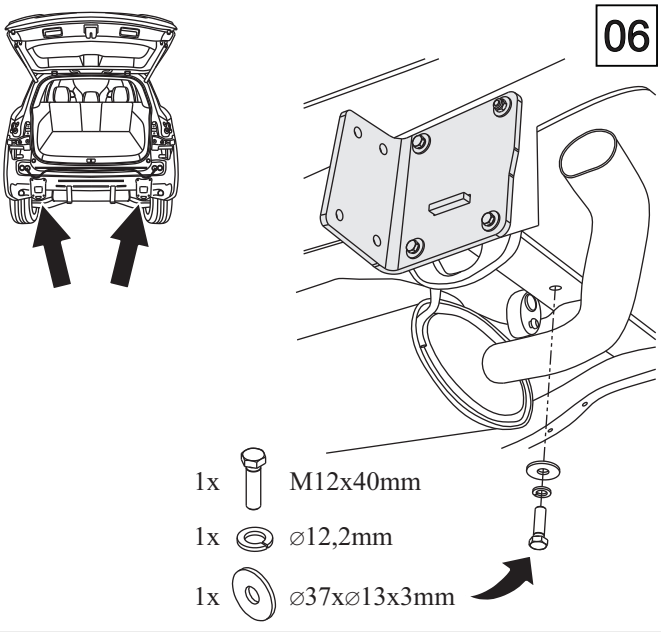

Oliant Trekhaken

07

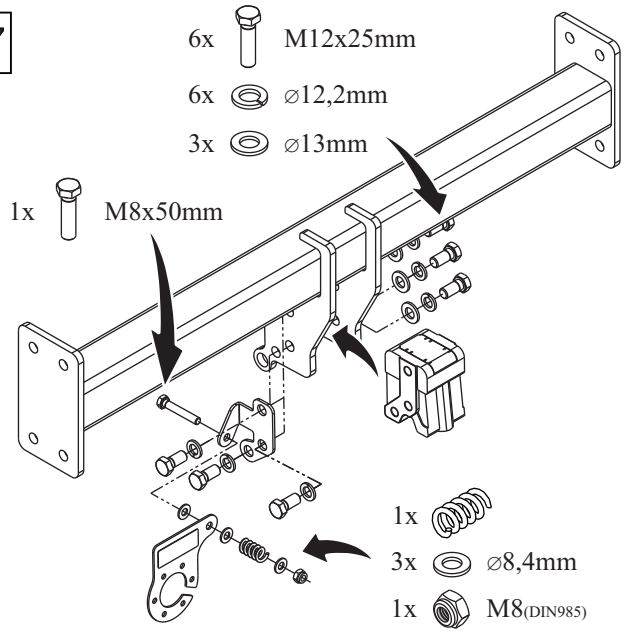

08

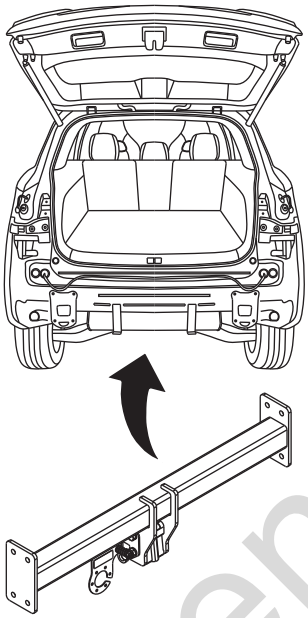

09

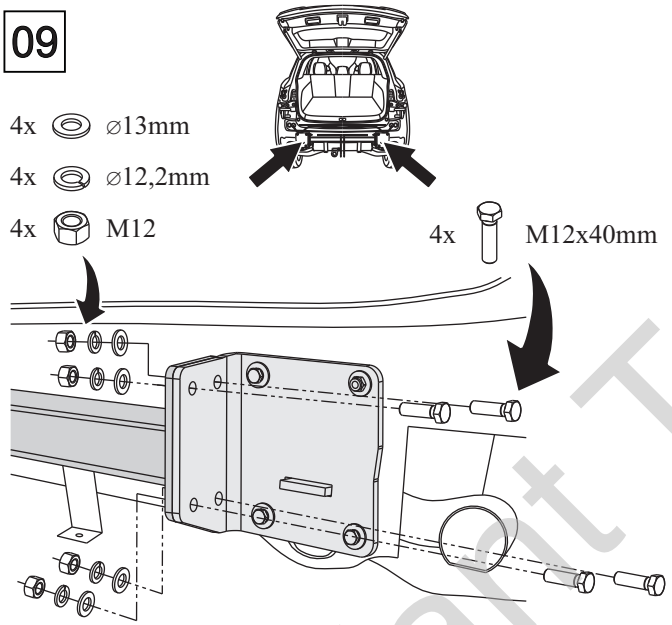

10

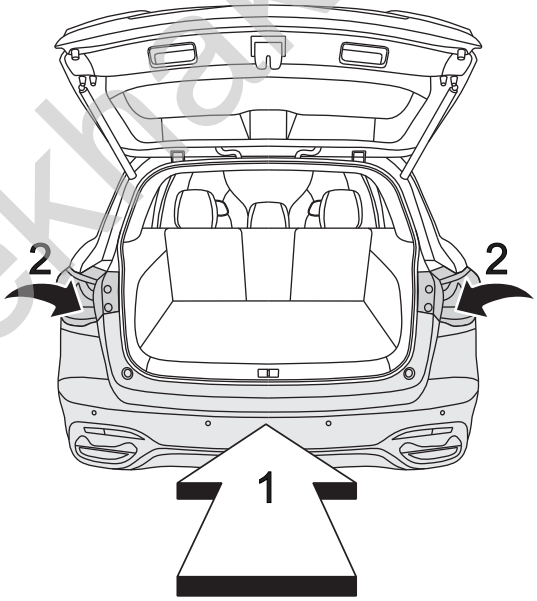

11

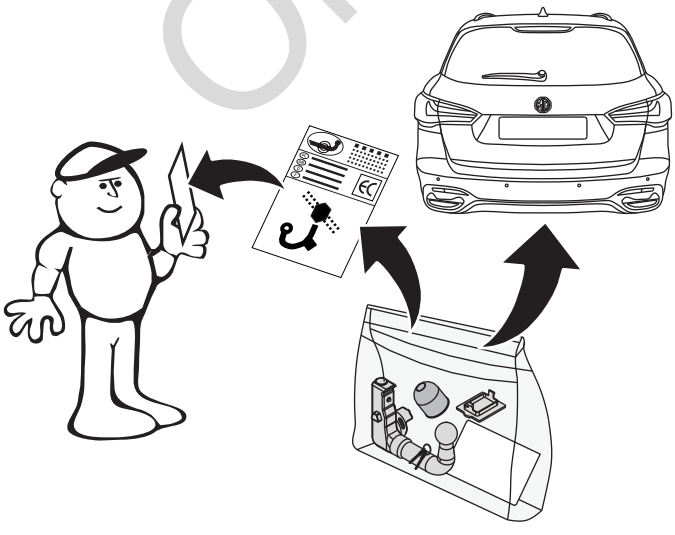

Olifant Trekhaken