AUTO-HAK Sp. z o.o.
ul. Słoneczna 16K 76-200 SŁUPSK
POLAND
tel/fax +48 59 8 414 414; +48 59 8 414 413
e-mail: office@autohak.com.pl
www.autohak.com.pl

AUTO-HAK

MAZDA CX-5

Nr kat.
M75

11.2025 →

E20 55R-03 7349

D 10,5 kN

R=2000 kg

S=100 kg

2h

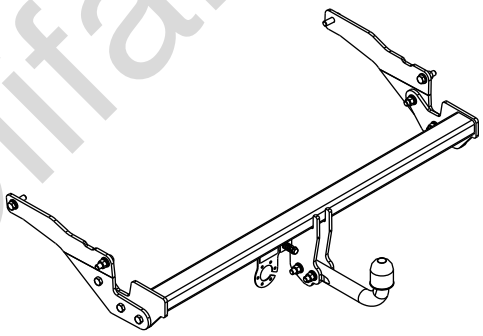

FULL VERSION INSTRUCTION

śruba / Nm	M6	M8	M10	M12	M14	M16
klasa 8.8	9,9	24	48	83	132	200
klasa 10.9	14	34	67	117	185	285

0 km → 1000 km

Olifant Trekhaken

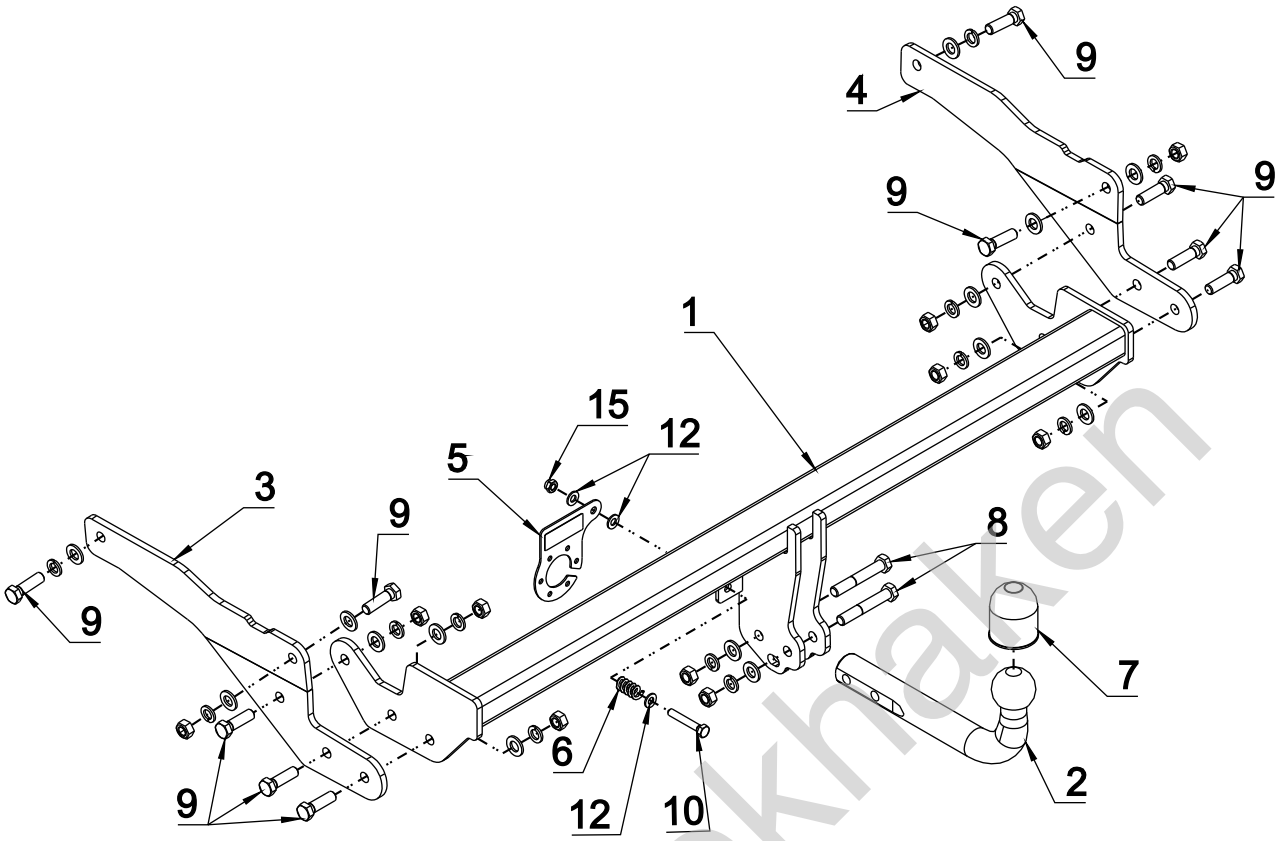

1	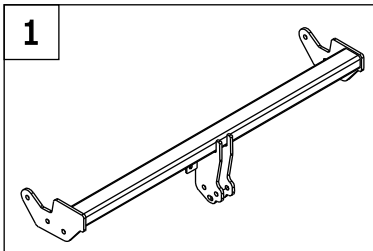	x 1	8	M12x75	x 2
			9	M12x40	x 10
			10	M8x50	x 1
			11	ø 13	x 14
			12	ø 8.5	x 3
2		x 1 Art.nr-KL1M75	13	ø 12.2	x 12
3	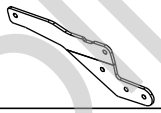	x 1	14	M12	x 10
4	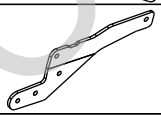	x 1	15	M8 (DIN985)	x 1
5	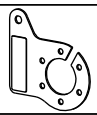	x 1 Art.nr-BL1M75			
6	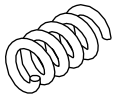	x 1			
7		x 1			

Oliant Trekhaken

01

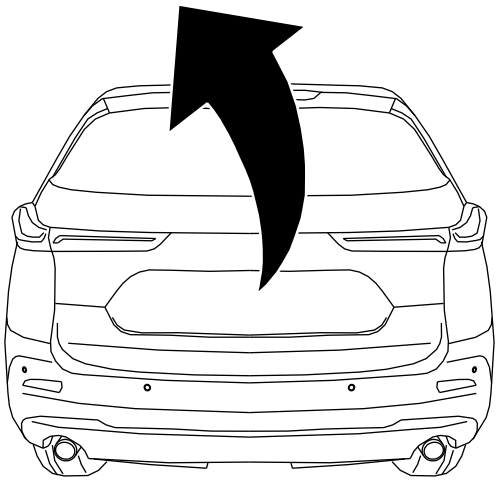

02

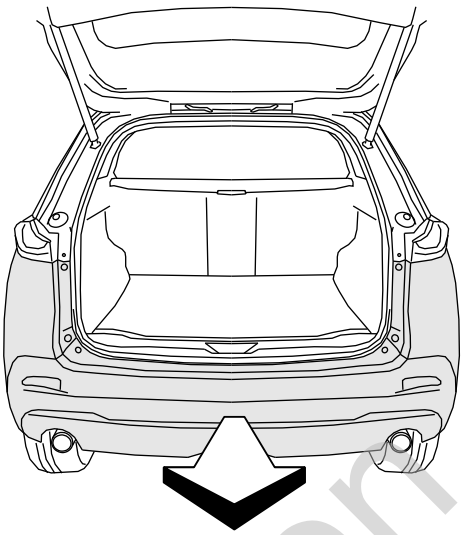

03

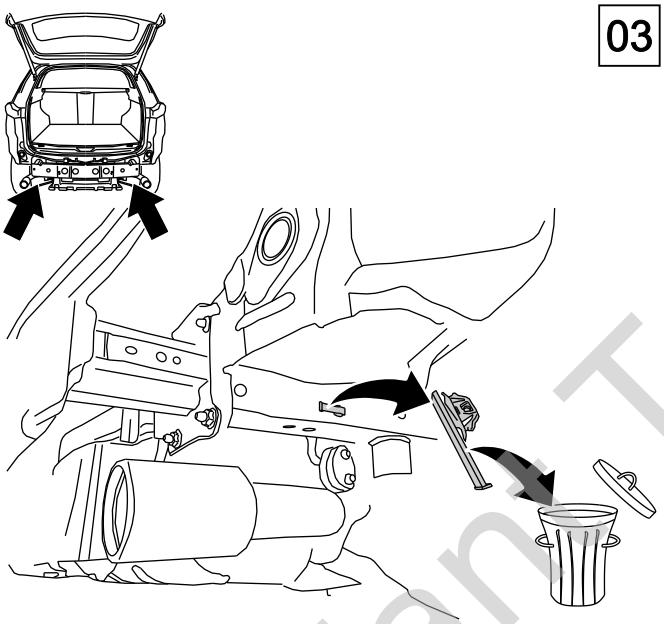

04

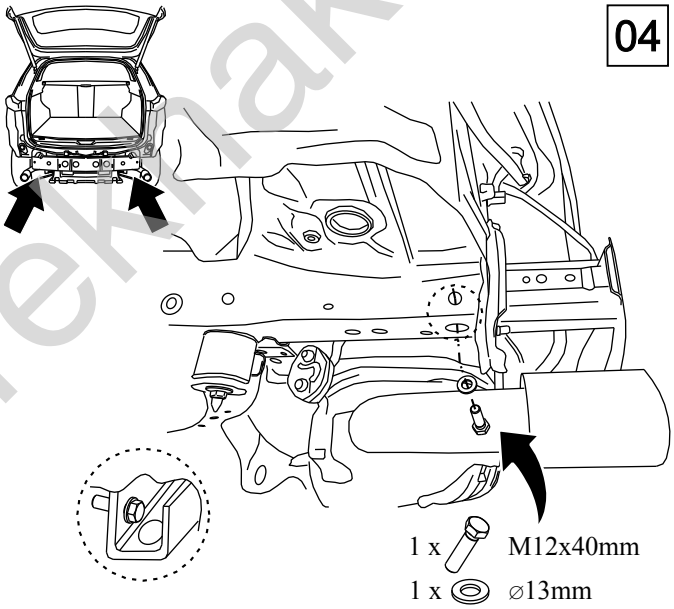

05

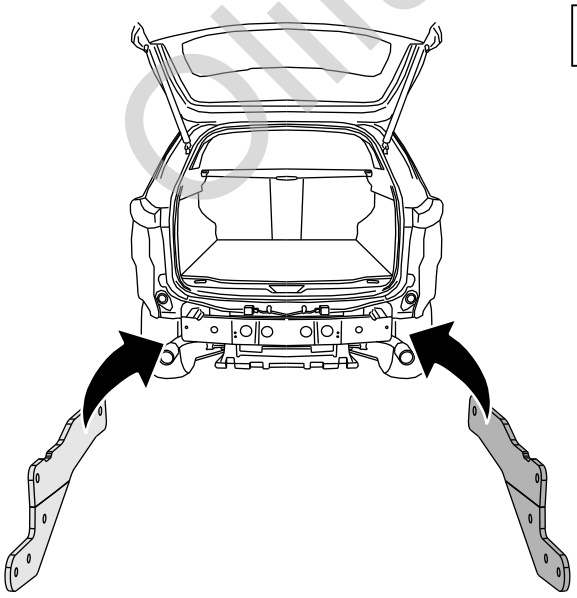

06

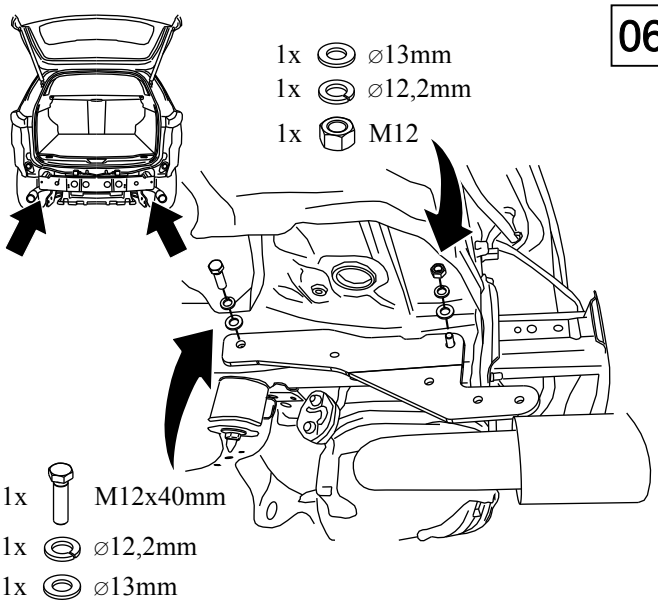

Olifant Trekhaken

07

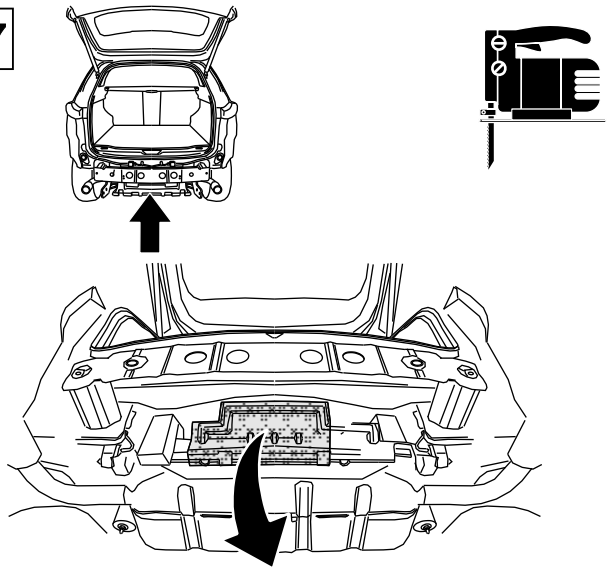

08

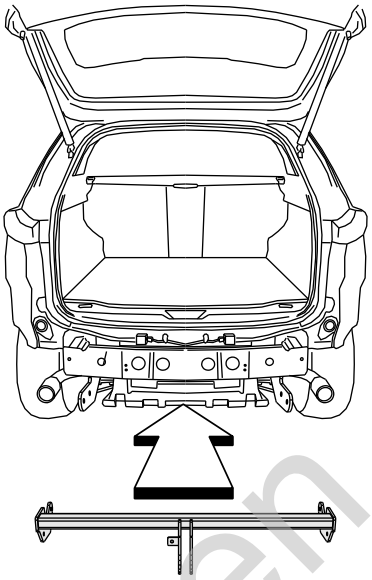

09

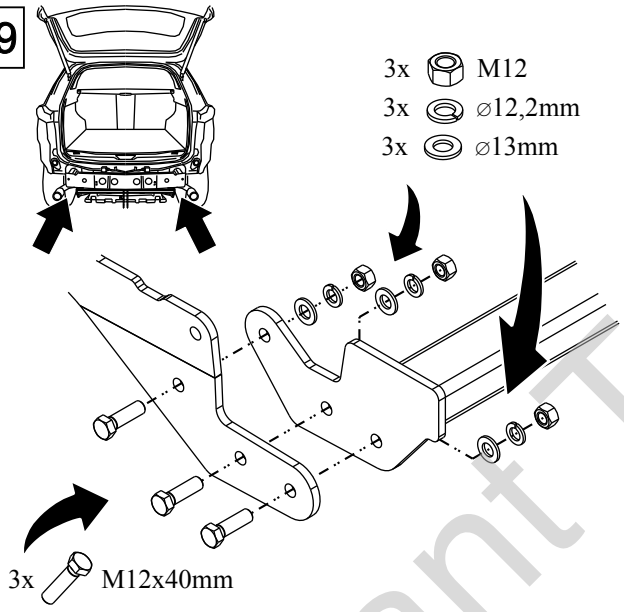

10

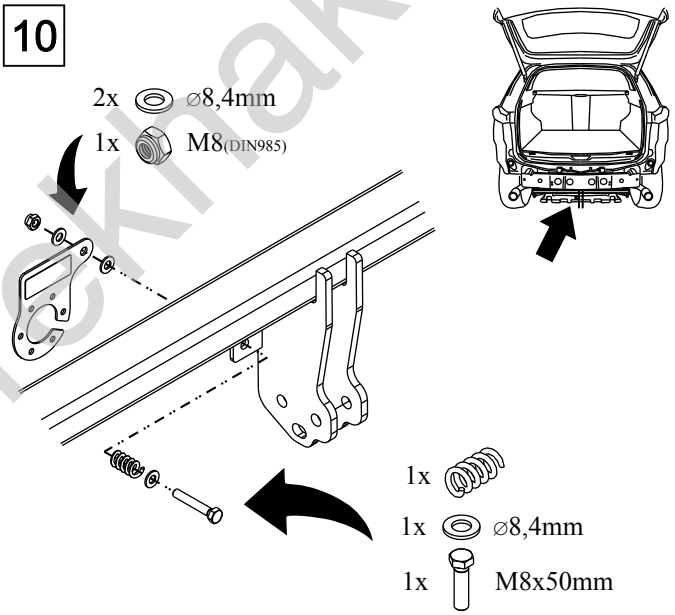

11

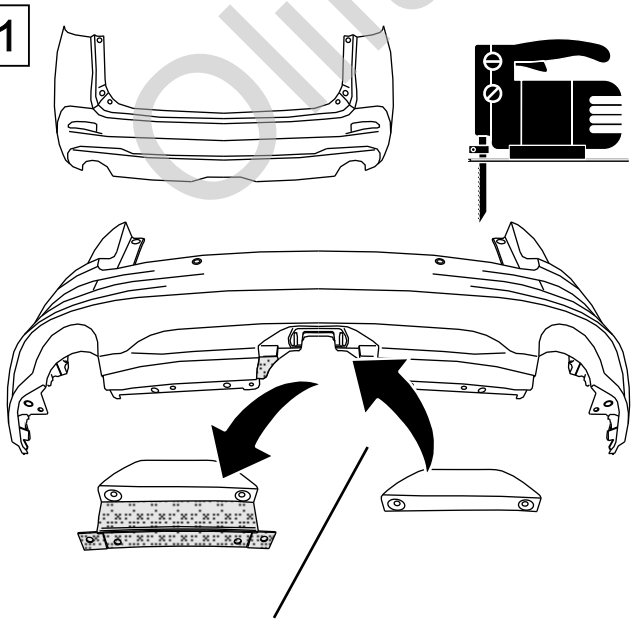

12

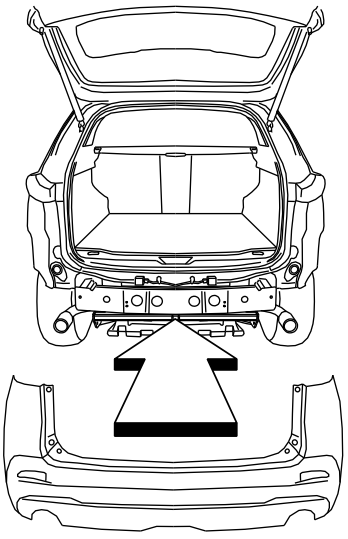

Olifant Trekhaken

13

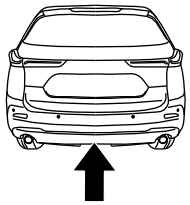

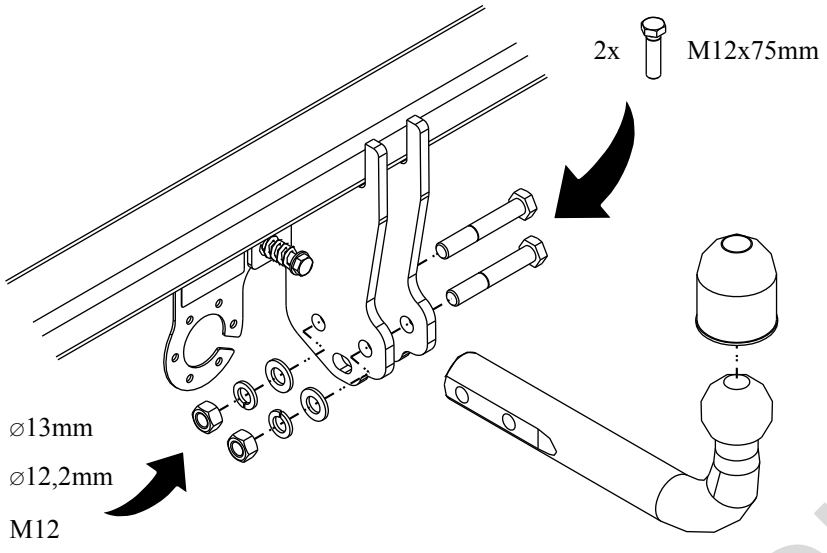

Olifant Trekhaken