AUTO-HAK Sp. z o.o.
ul. Słoneczna 16K 76-200 SŁUPSK
POLAND
tel/fax +48 59 8 414 414; +48 59 8 414 413
e-mail: office@autohak.com.pl
www.autohak.com.pl

AUTO-HAK

VOLKSWAGEN
T-CROSS (facelift)

Nr kat.
K85

05.2023 →

E20 55R-03 7328

D 7,9 kN

R=1400 kg

S=75 kg

2h

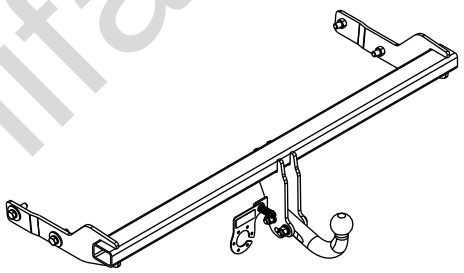

FULL VERSION INSTRUCTION

śruba / Nm	M6	M8	M10	M12	M14	M16
klasa 8.8	9,9	24	48	83	132	200
klasa 10.9	14	34	67	117	185	285

0 km → 1000 km

Olifant Trekhaken

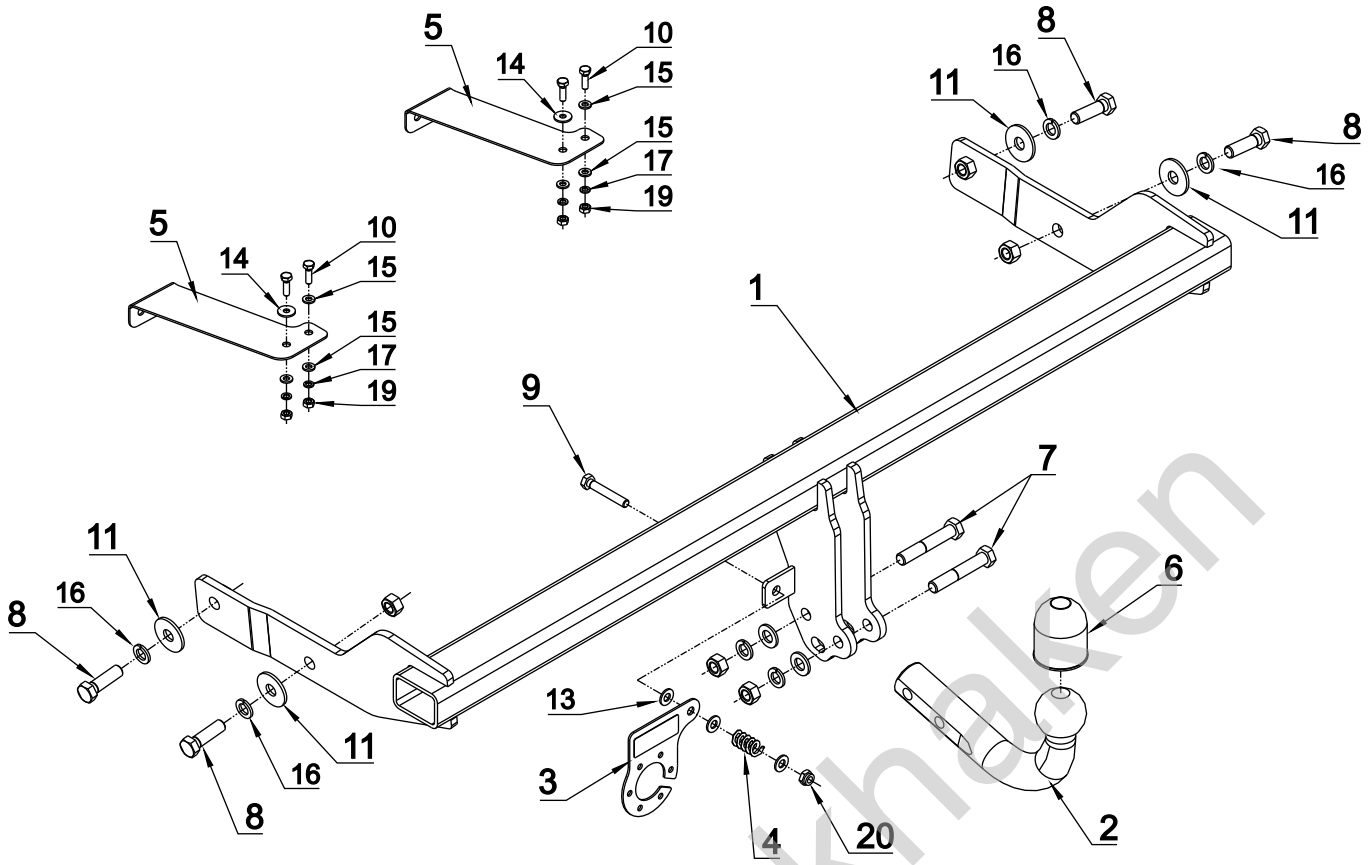

1	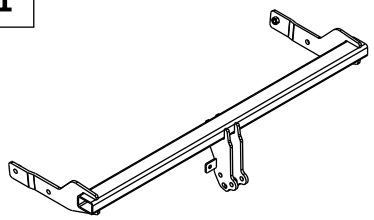	x 1	7	M12x70	10.9 / 2
2	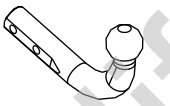	x 1 Art.nr-KL1K85	8	M12x40	10.9 / 4
3		x 1 Art.nr-BL12K85	9	M8x50	8.8 / 1
4		x 1	10	M6x20	8.8 / 4
5		x 2	11	ø 37xø13x3 13 (DIN 9021)	x 4
6		x 1	12	ø 13	x 2
			13	ø 8.4	x 3
			14	ø 18xø6.4x1.6 6 (DIN 9021)	x 4
			15	ø 6.4	x 6
			16	ø 12.2	x 6
			17	ø 6.1	x 2
			18	M12	x 4
			19	M6	x 2
			20	M8 (DIN985)	x 1

Olifant Trekhaken

01

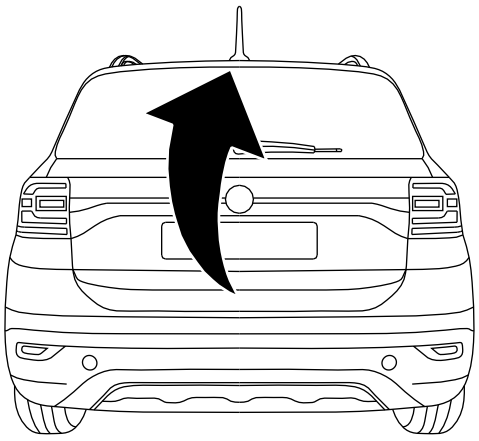

02

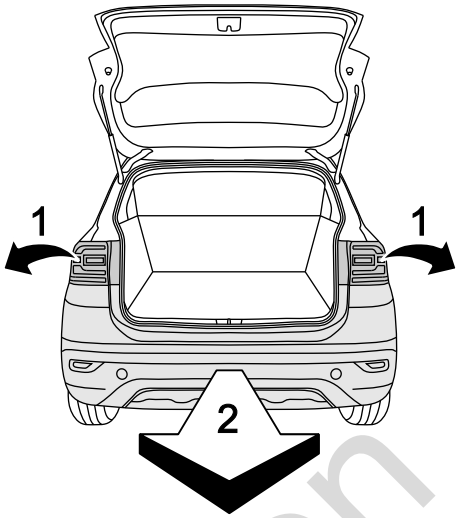

03

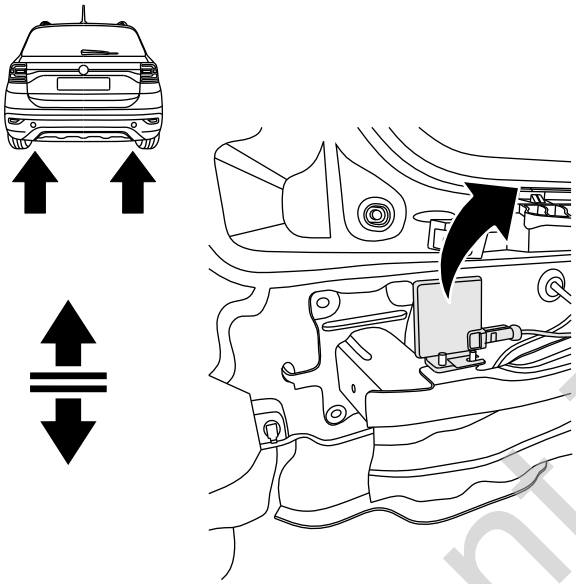

04

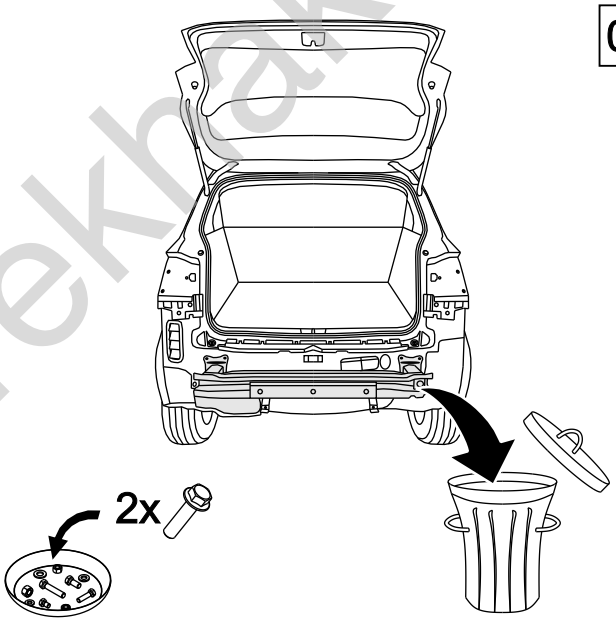

05

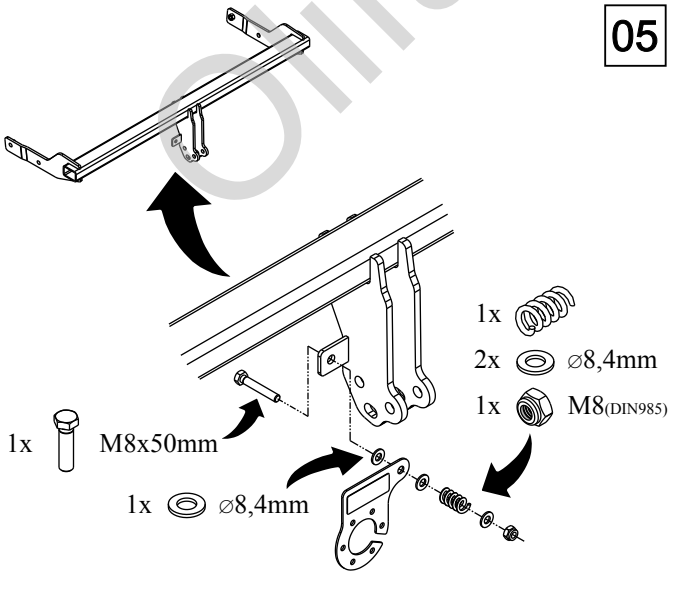

06

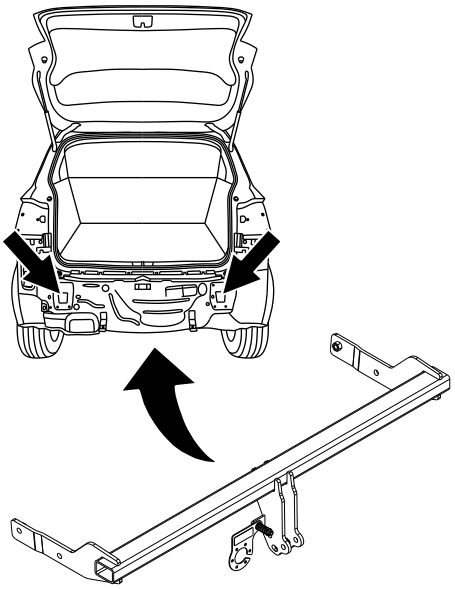

Olifant Trekhaken

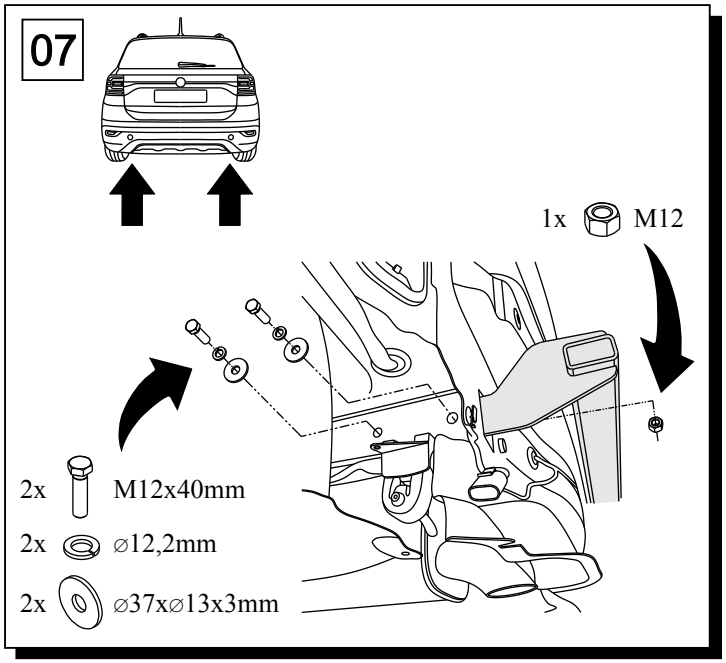

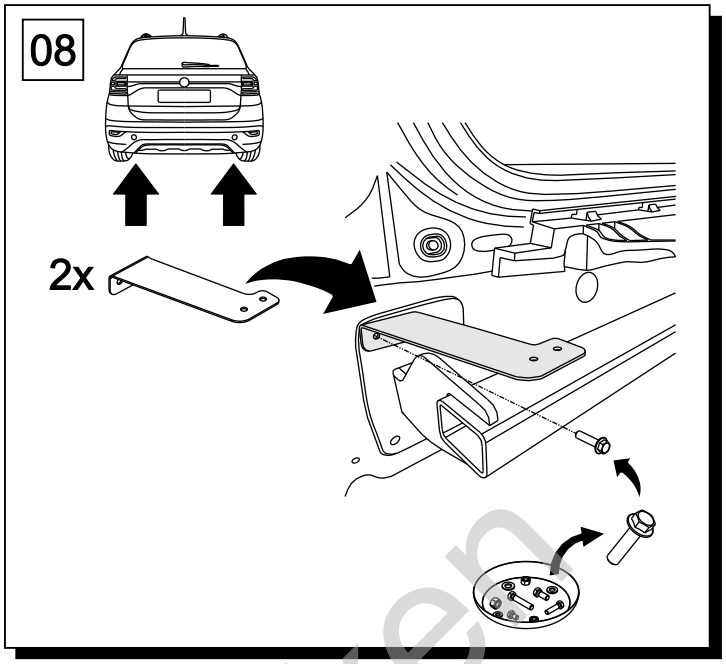

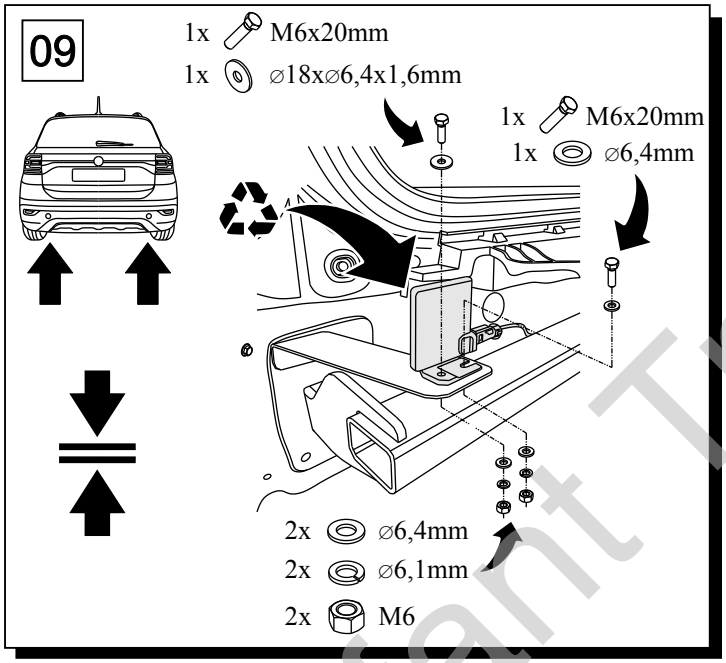

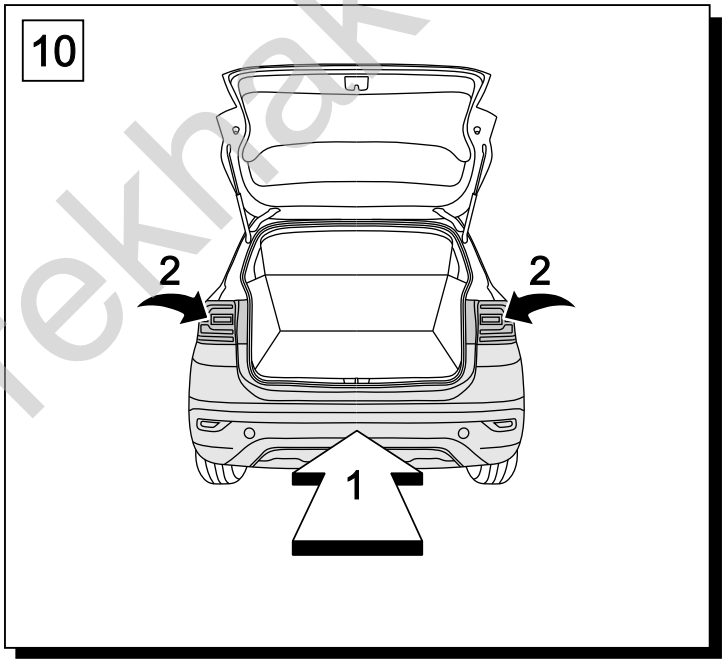

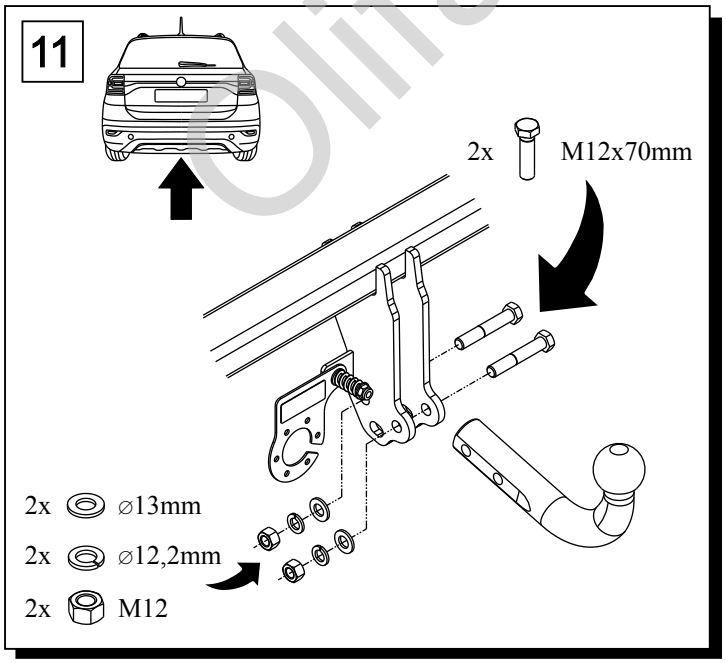

Olifant Trekhaken