AUTO-HAK Sp. z o.o.
ul. Słoneczna 16K 76-200 SŁUPSK
POLAND
tel/fax +48 59 8 414 414; +48 59 8 414 413
e-mail: office@autohak.com.pl
www.autohak.com.pl

AUTO-HAK

MG HS

Nr kat.
MG02A

12.2020 → 2024

E20 E20*55R02*6908

2h

D 9,3 kN

R=1750 kg

S=90 kg

22,1 kg

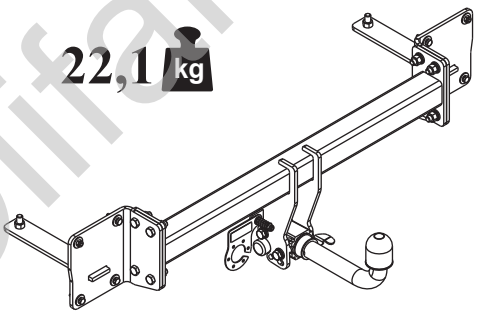

FULL VERSION INSTRUCTION

śruba / Nm	M6	M8	M10	M12	M14	M16
klasa 8.8	9,9	24	48	83	132	200
klasa 10.9	14	34	67	117	185	285

0 km → 1000 km

Oifant Trekhaken

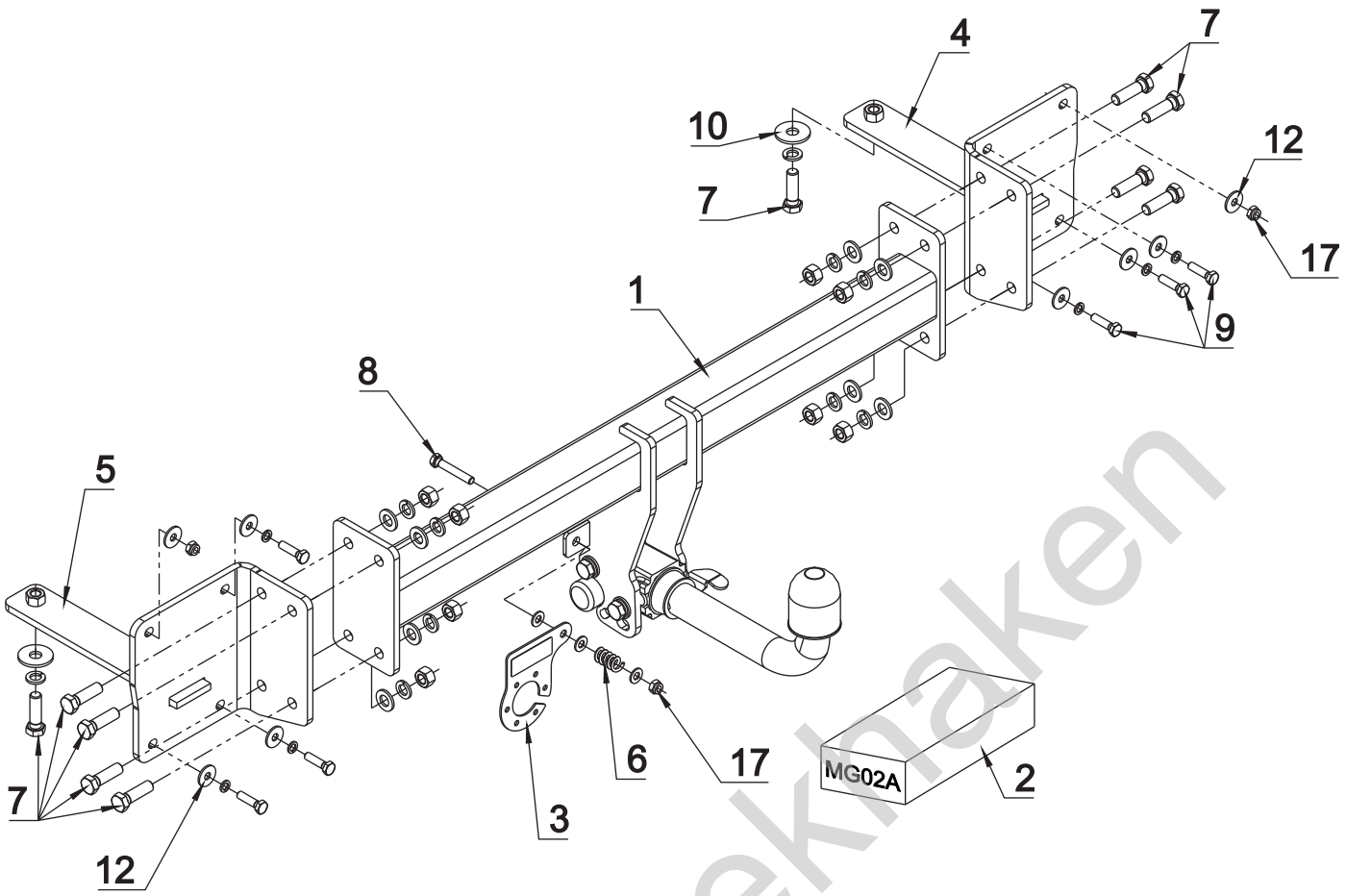

Olifant Trekhaken

1	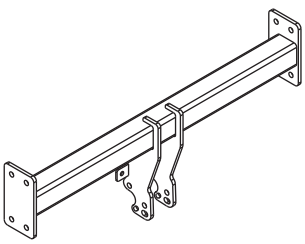	x 1	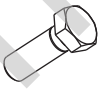	7	M12x40	x 10
				8	M8x50	x 1
				9	M8x30	x 6
				10	ø 37xø13x3 13 DIN 9021	2
2	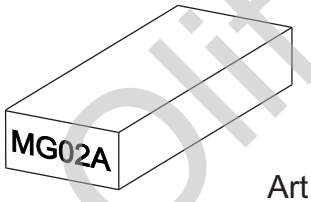	x 1		11	ø 13	x 8
	Art.nr-KL1MG02A			12	ø 24xø8.4x2 8 DIN 9021	8
				13	ø 8.4	x 3
3		x 1		14	ø 12.2	x 10
	Art.nr-BL12MG02A			15	ø 8.2	x 6
4	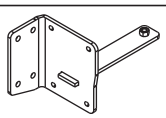	x 1	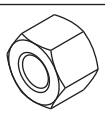	16	M12	x 8
5	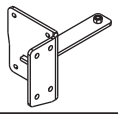	x 1		17	M8 (DIN985)	x 3
6	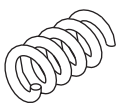	x 1				

01

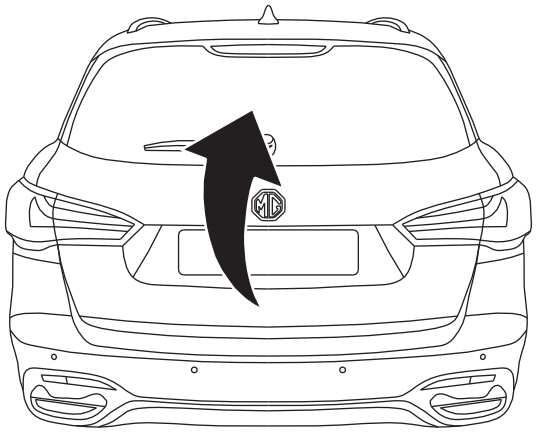

02

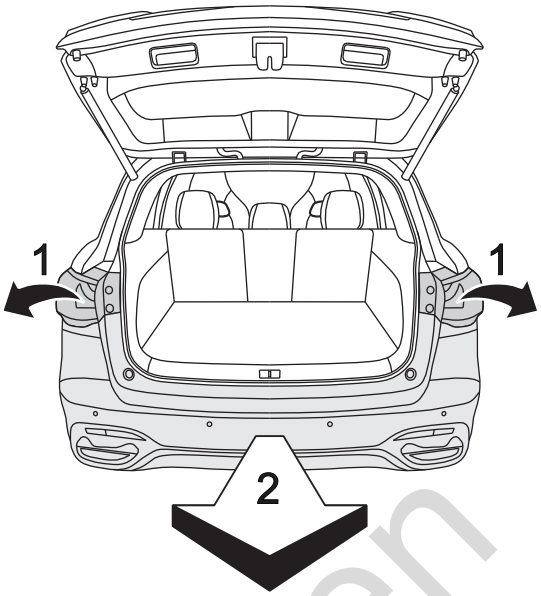

03

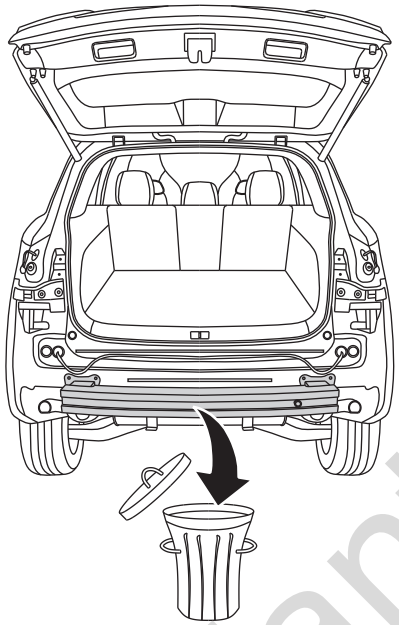

04

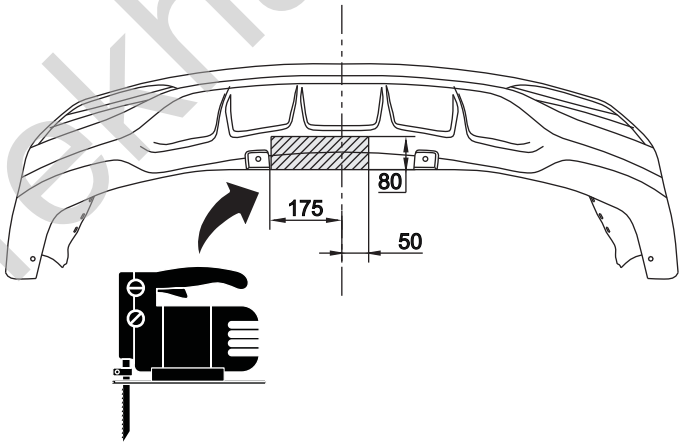

05

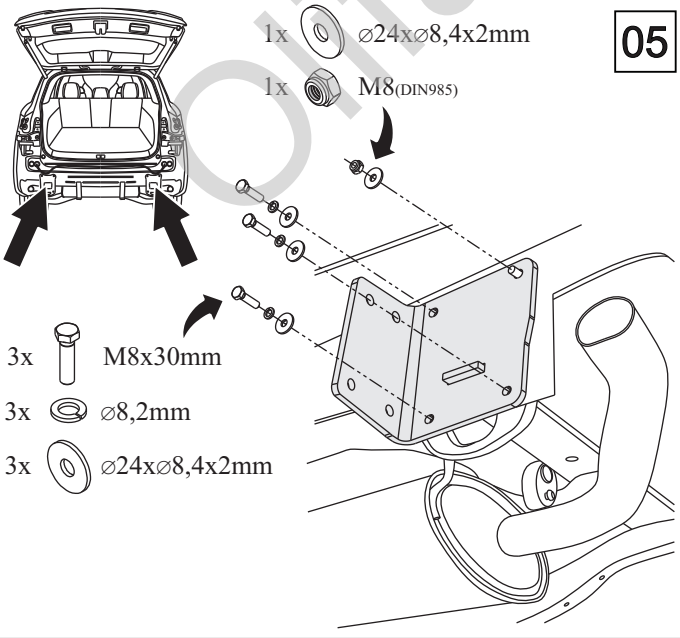

06

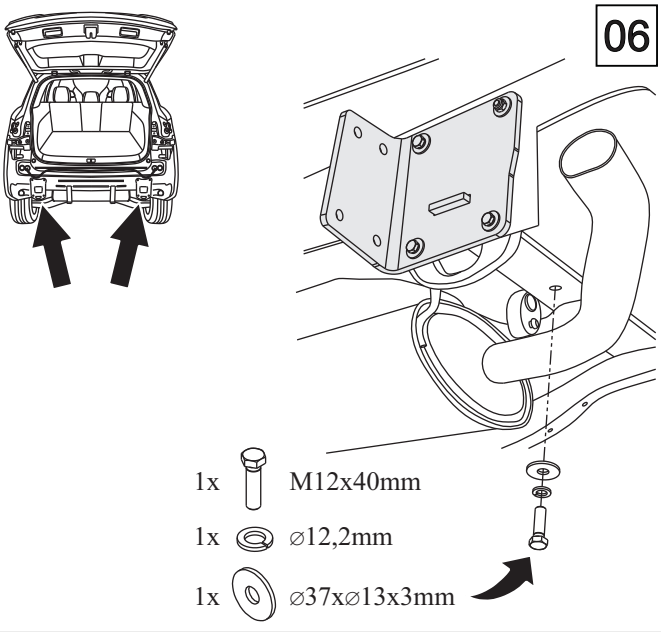

Oliant Trekhaken

07

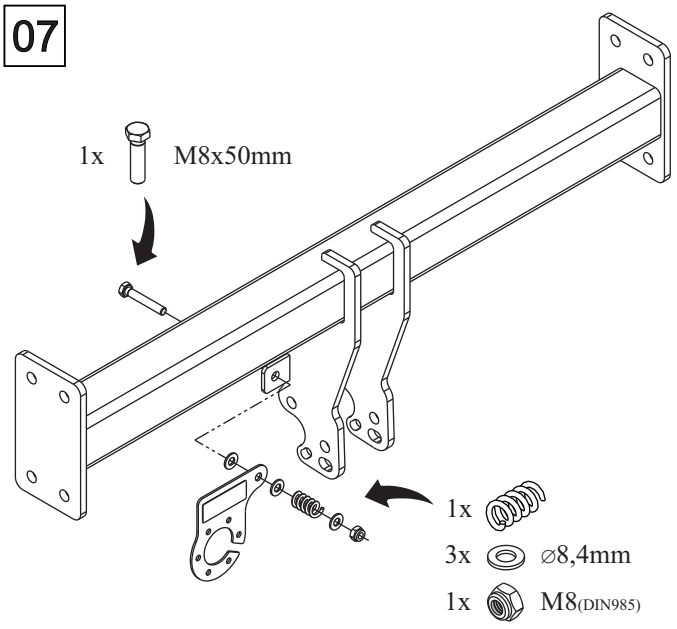

08

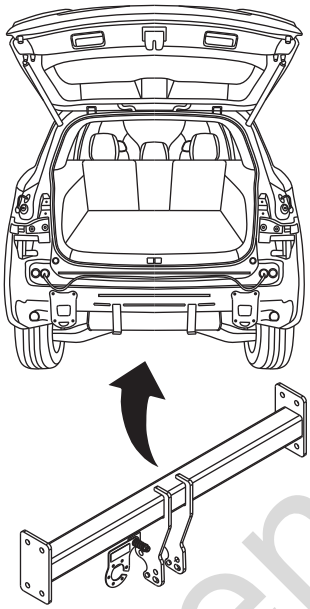

09

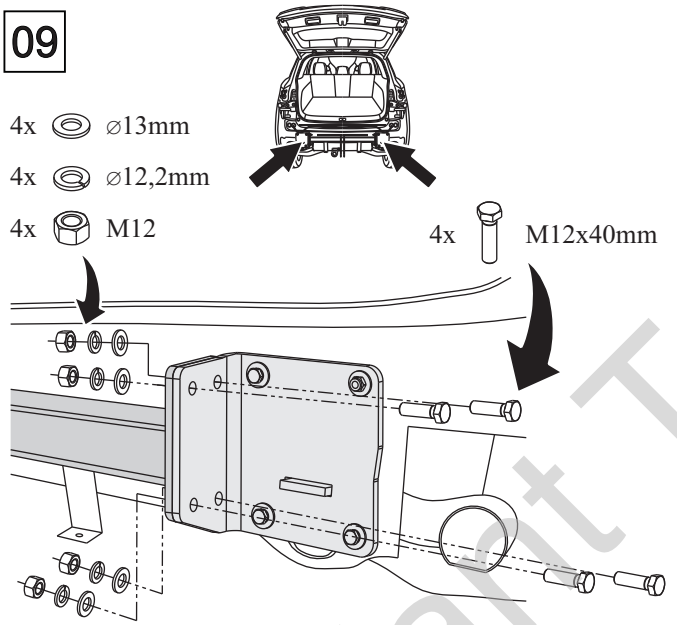

10

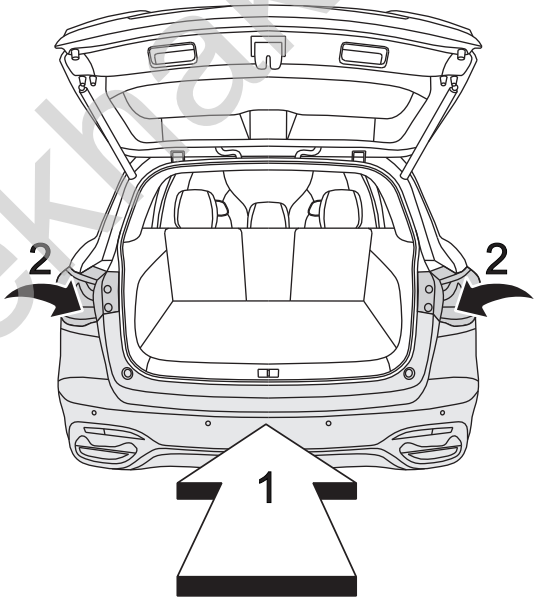

11

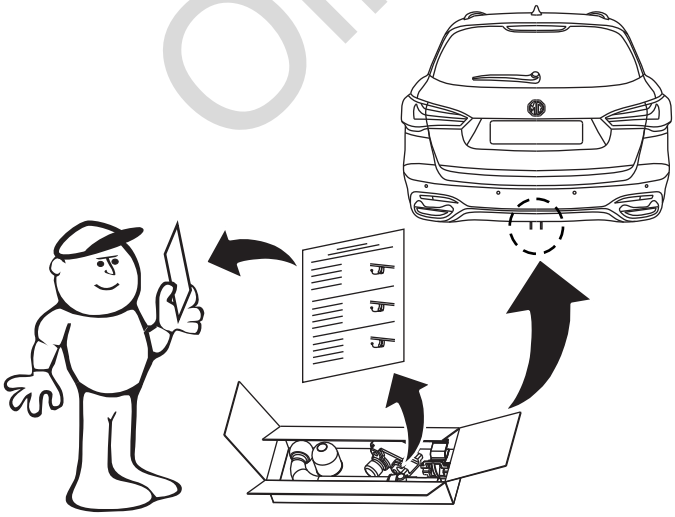

Olifant Trekhaken



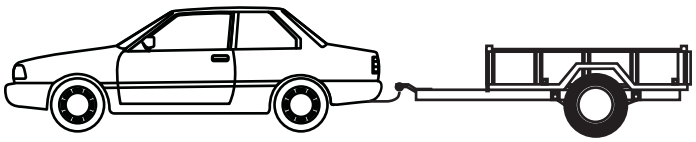

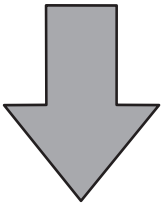

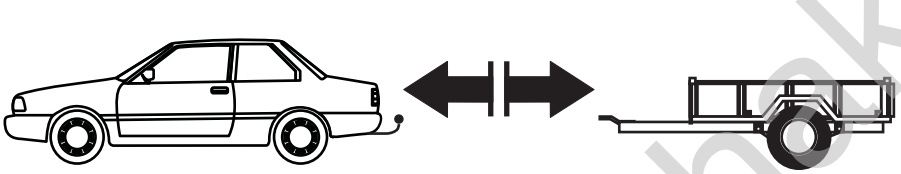









Olifant Trekhaken