AUTO-HAK Sp. z o.o.
ul. Słoneczna 16K 76-200 SŁUPSK
POLAND
tel/fax +48 59 8 414 414; +48 59 8 414 413
e-mail: office@autohak.com.pl
www.autohak.com.pl

AUTO-HAK

JEEP GRAND CHEROKEE V LONG "L"

(typ/type WL)
+ Plug-In Hybrid

Nr kat.
JP18V





05.2021 →



2h



55R-03 7234

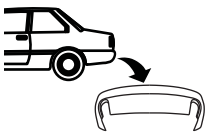

D **14,6 kN**

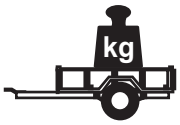

R=2800 kg





S=150 kg

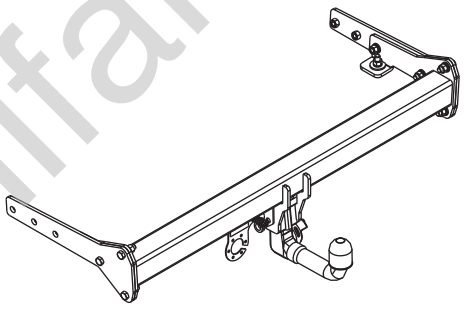

FULL VERSION INSTRUCTION



śruba / Nm	M6	M8	M10	M12	M14	M16
klasa 8.8	9,9	24	48	83	132	200
klasa 10.9	14	34	67	117	185	285

0 km → 1000 km

Olifant Trekhaken

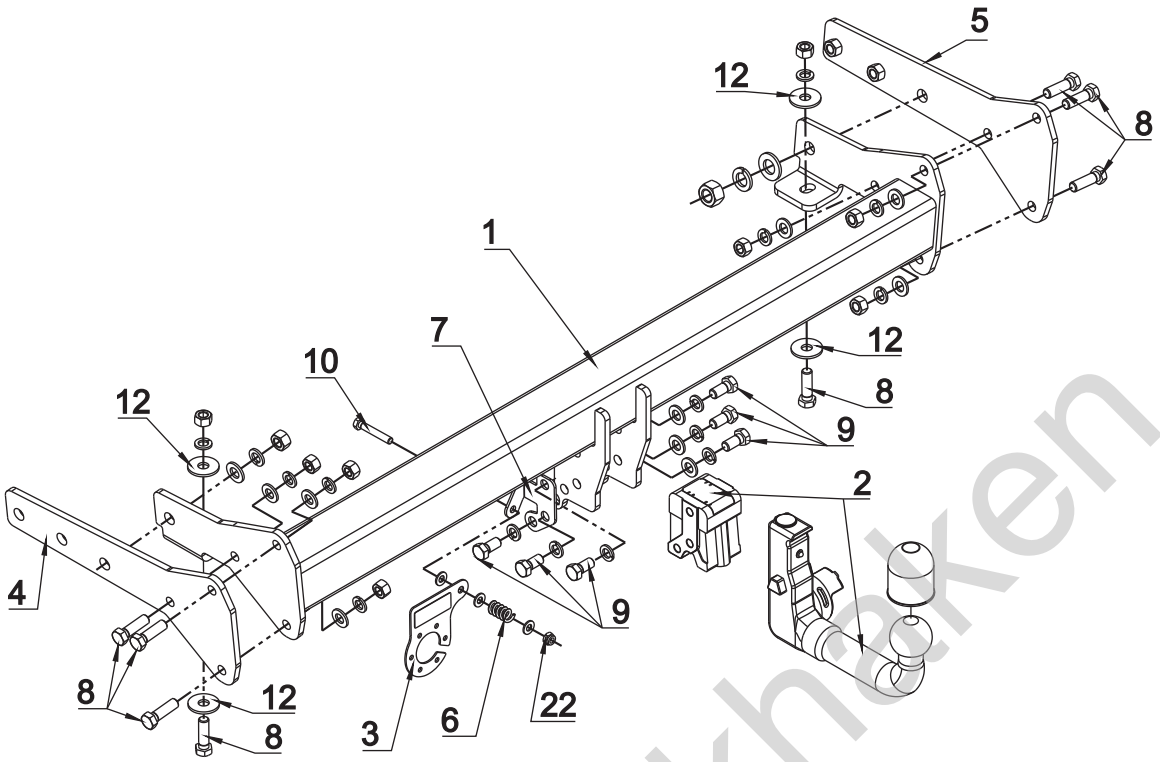

1	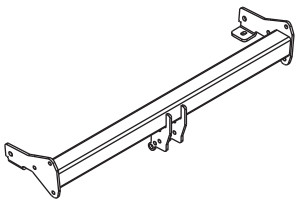	x 1	8	M12x40	x 8
2	 Art.nr-KL1JP18A	x 1	9	M12x25	x 6
3	 Art.nr-BL1JP18A	x 1	10	M8x50	x 1
4	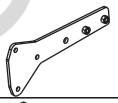	x 1	11	ø 15	x 2
5	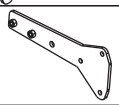	x 1	12	ø 37xø13x3 13 DIN 9021	4
6	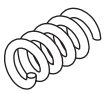	x 1	13	ø 13	x 9
7		x 1	14	ø 24xø8.4x2 8 DIN 9021	x 2
			15	ø 8.4	x 3
			16	ø 14.2	x 2
			17	ø 12.2	x 14
			18	ø 8.2	x 2
			19	M14	x 2
			20	M12	x 8
			21	M8	x 2
			22	M8 (DIN985)	x 1

Oliant Trekhaken

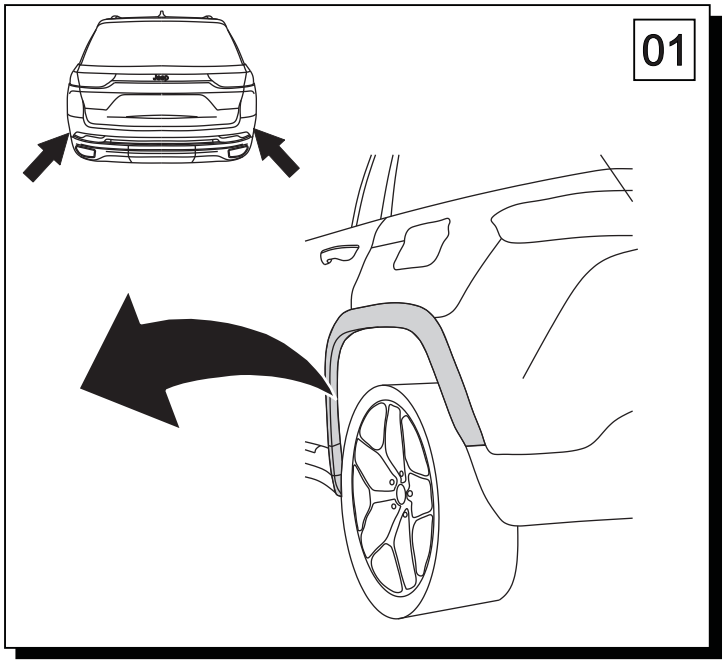

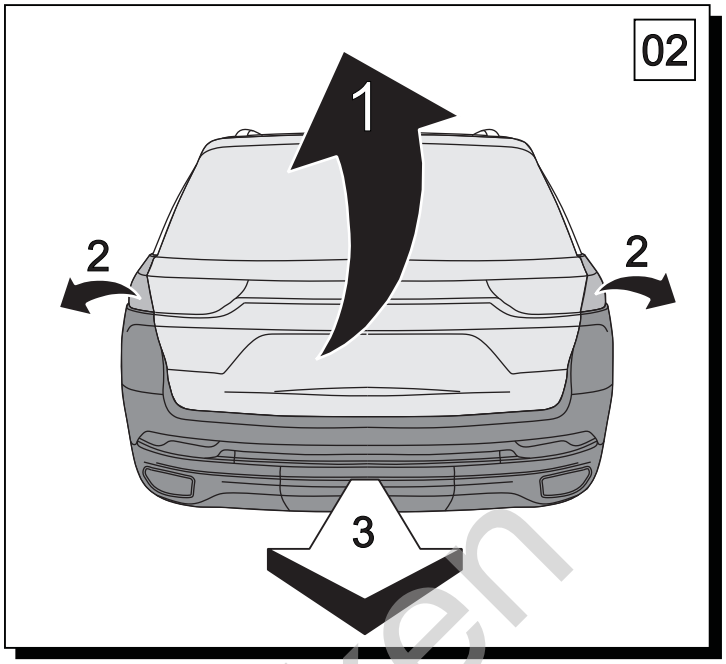

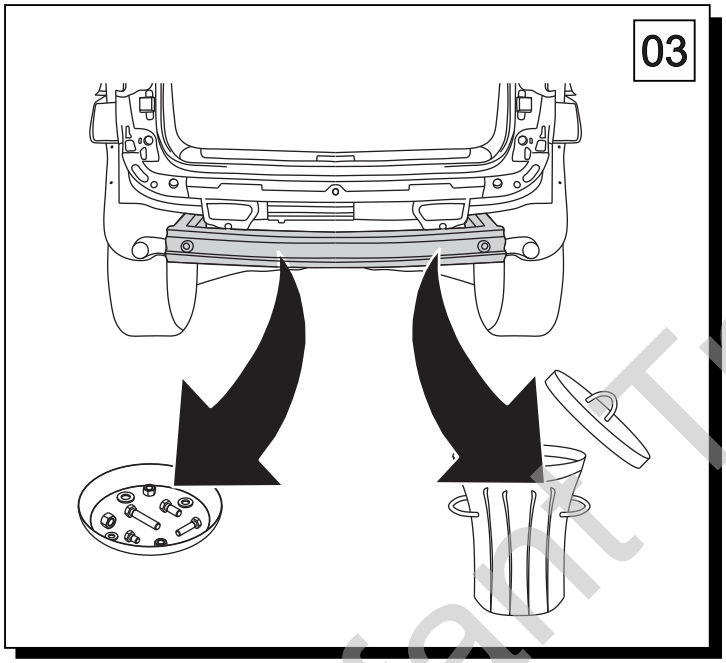

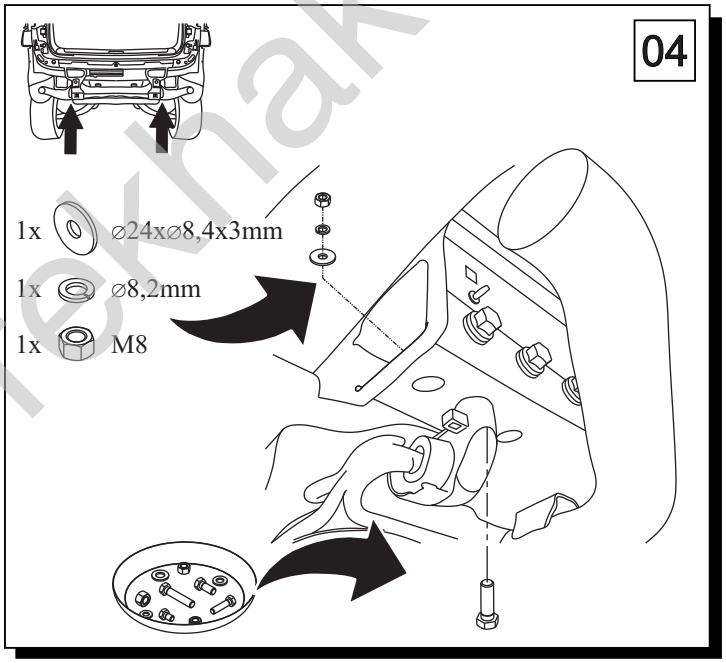

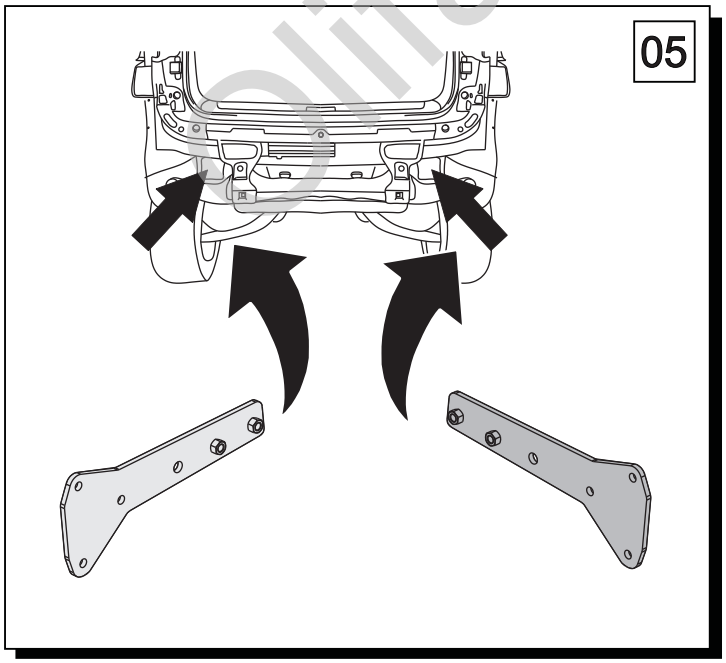

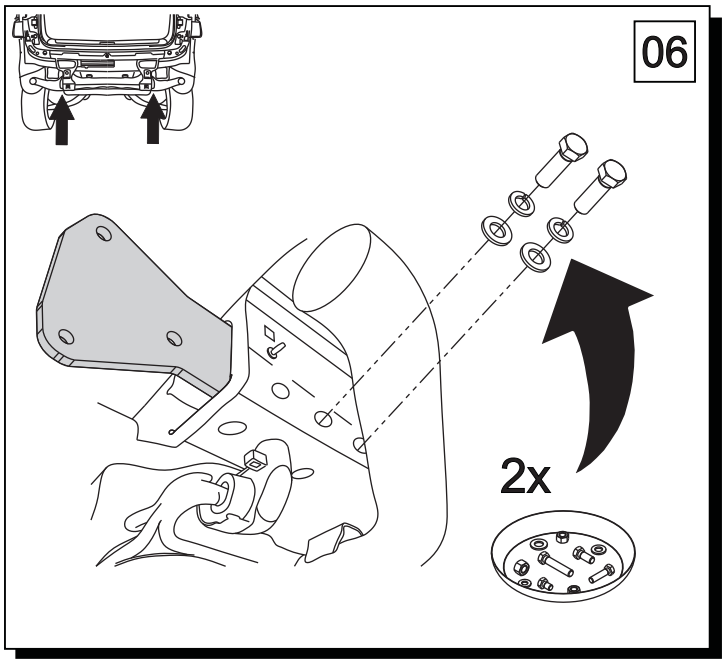

Uitlaat Trekhaken

07

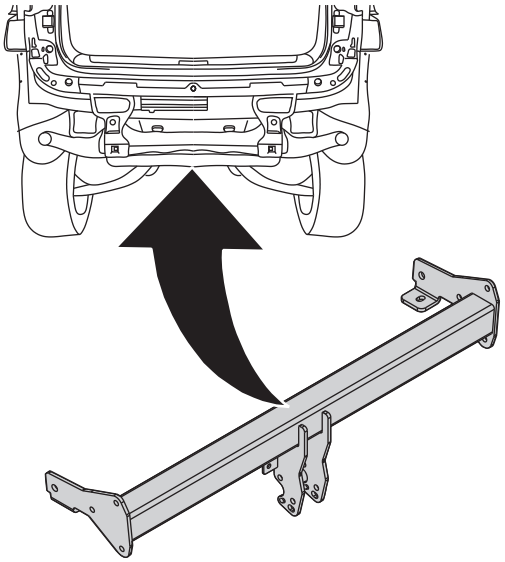

08

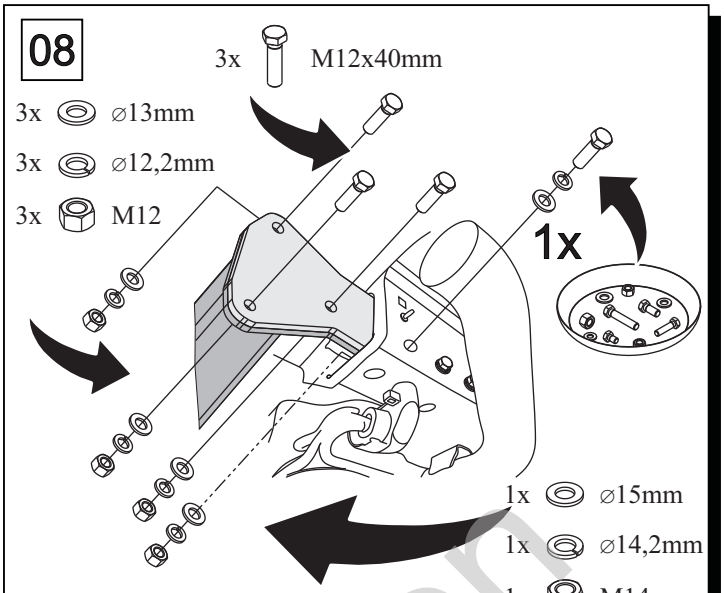

09

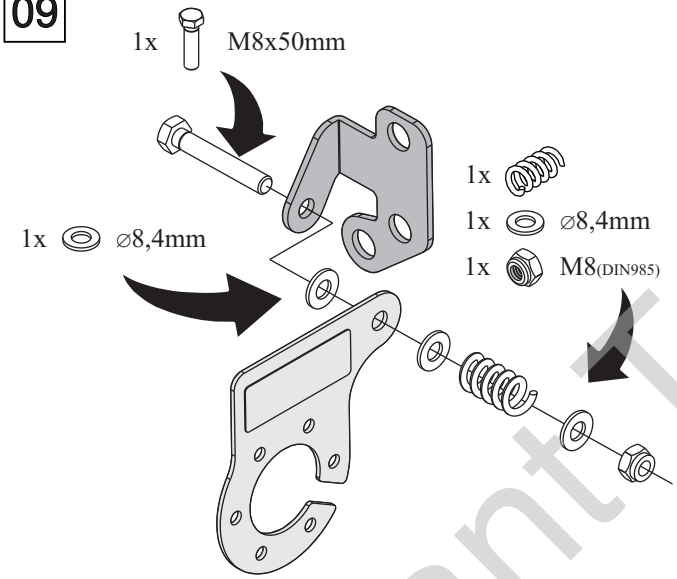

10

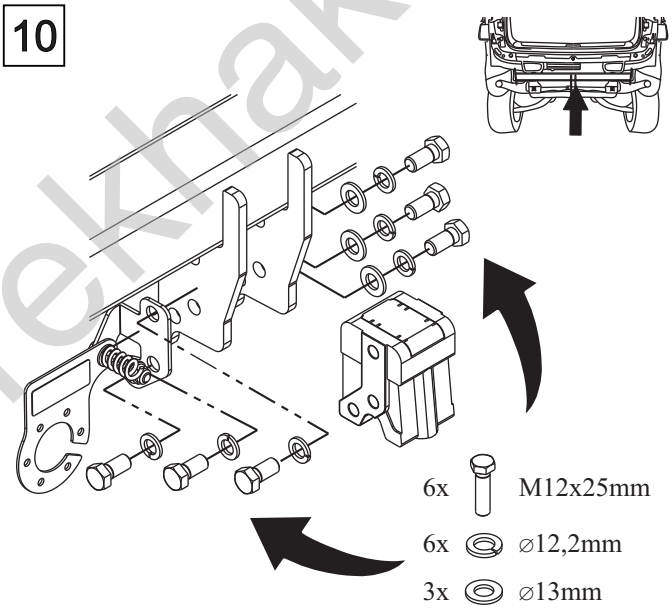

11

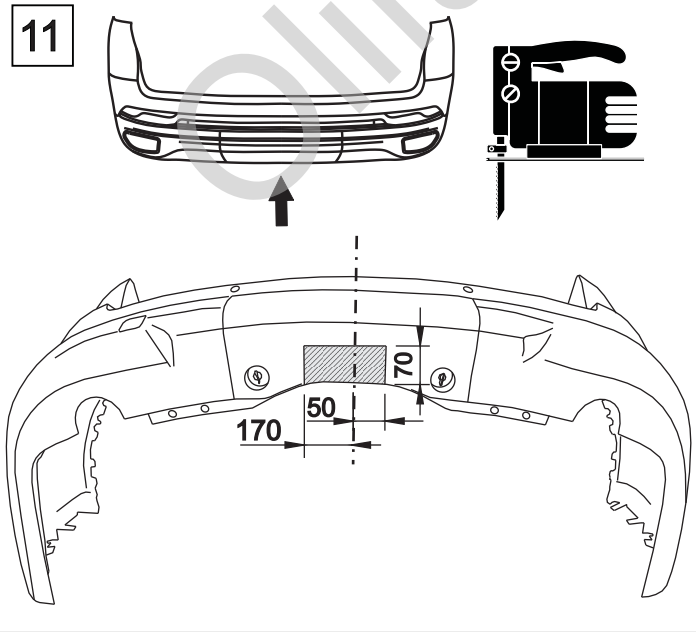

12

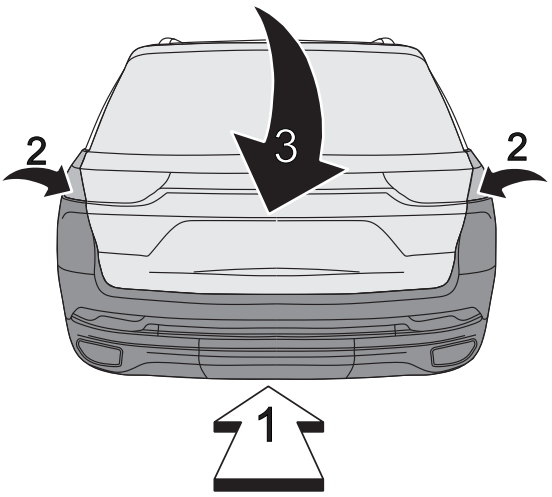

Olifant Trekhaken

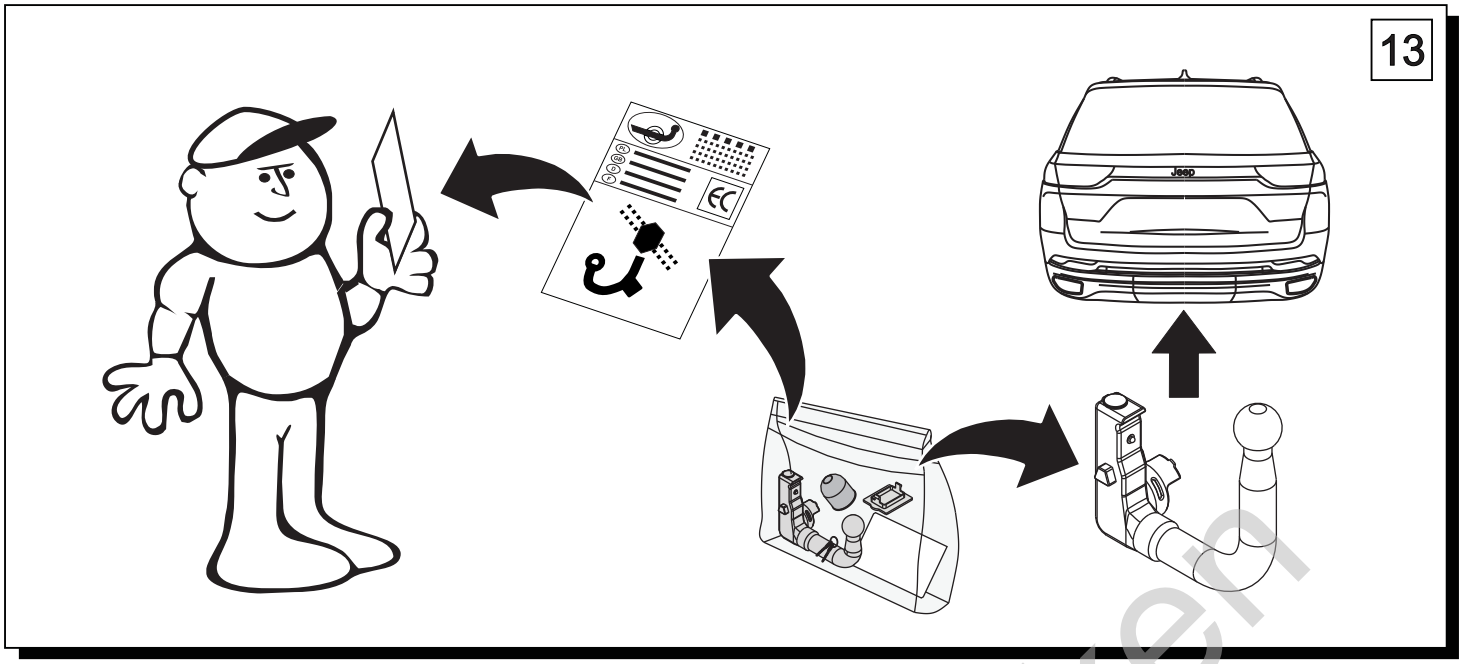

Olifant Trekhaken