AUTO-HAK Sp. z o.o.
ul. Słoneczna 16K 76-200 SŁUPSK
POLAND
tel/fax +48 59 8 414 414; +48 59 8 414 413
e-mail: office@autohak.com.pl
www.autohak.com.pl

AUTO-HAK

MAZDA 6e

Nr kat.
M74V

2025 →

E20 55R-03 7231

D 9,2 kN

2h

kg R=1500 kg

S=75 kg

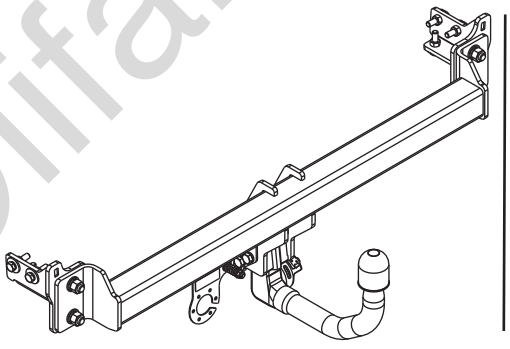

FULL VERSION INSTRUCTION

śruba / Nm	M6	M8	M10	M12	M14	M16
klasa 8.8	9,9	24	48	83	132	200
klasa 10.9	14	34	67	117	185	285

0 km → 1000 km

Olifant Trekhaken

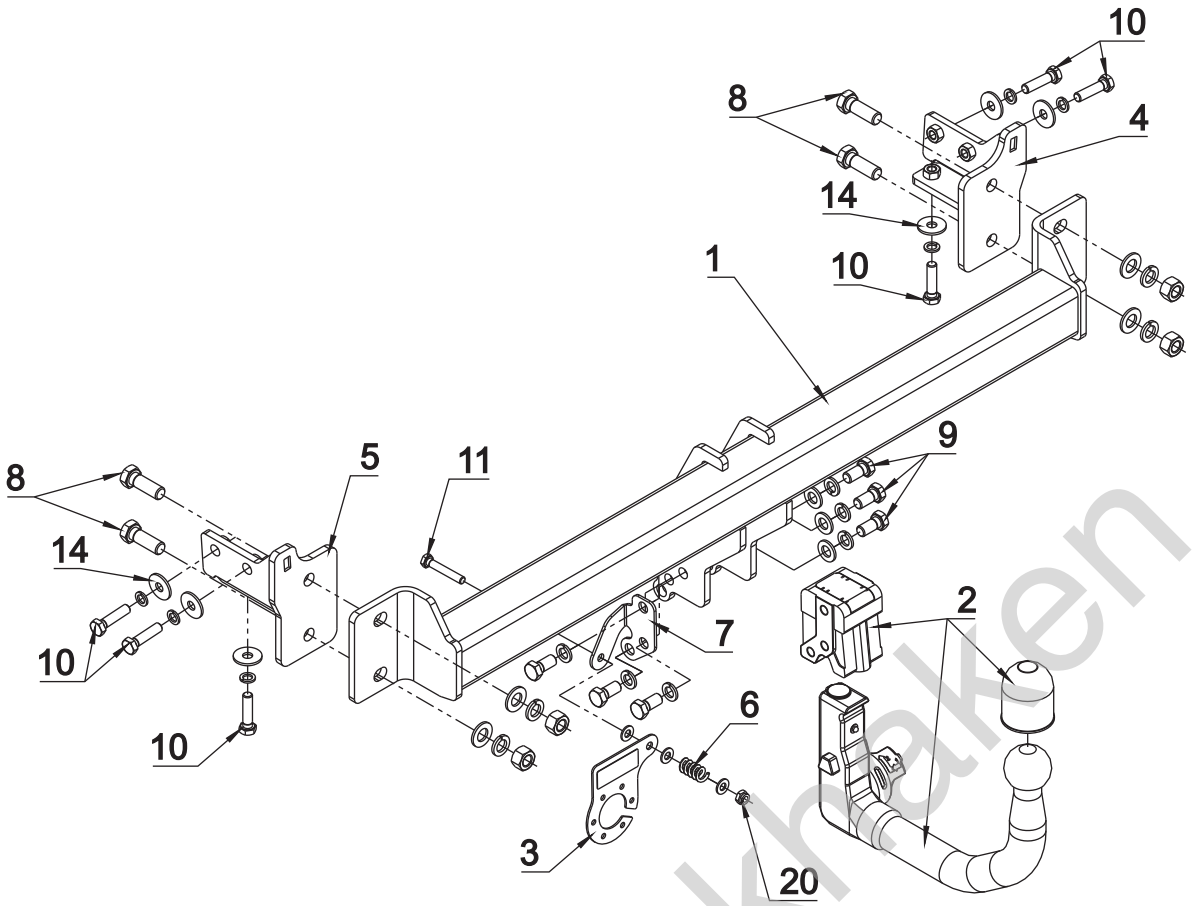

1	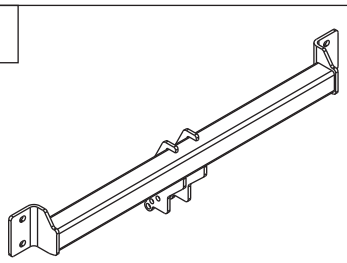	x 1	8	M14x40	8.8 / 4
			9	M12x25	10.9 / 6
			10	M10x40	8.8 / 6
			11	M8x50	8.8 / 1
2	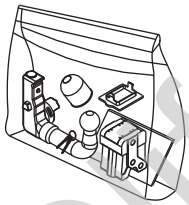 Art.nr-KL1M74V	x 1	12	ø 15	x 4
			13	ø 13	x 3
			14	ø 30xø10.5x2.5 10 DIN 9021	6
			15	ø 8.4	x 3
3	 Art.nr-BL12M74V	x 1	16	ø 14.2	x 4
			17	ø 12.2	x 6
			18	ø 10.2	x 6
4	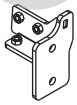	x 1	19	M14	x 4
5		x 1			
6	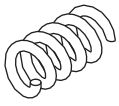	x 1	20	M8 (DIN985)	x 1
7		x 1			

Oliant Trekhaken

01

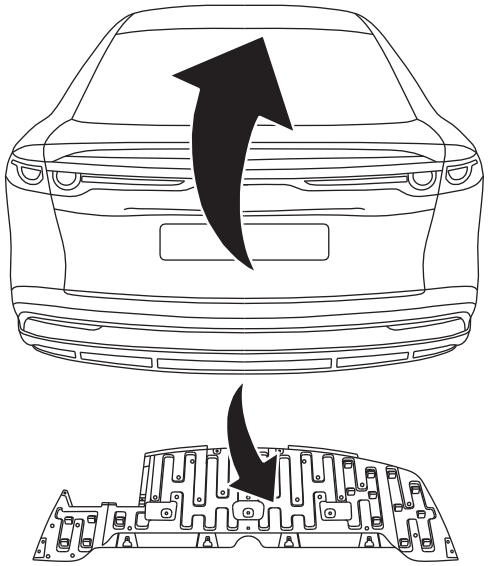

02

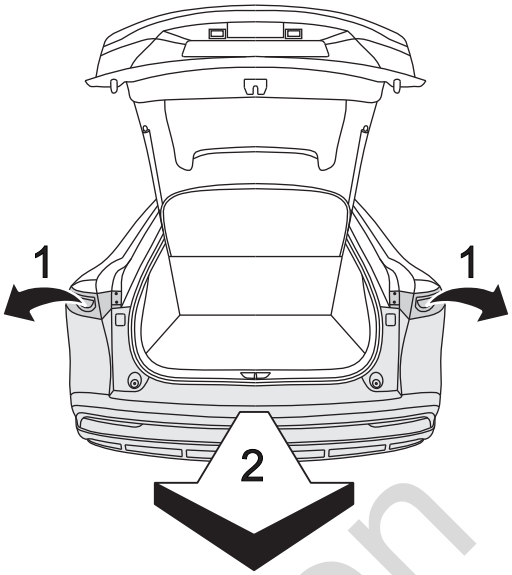

03

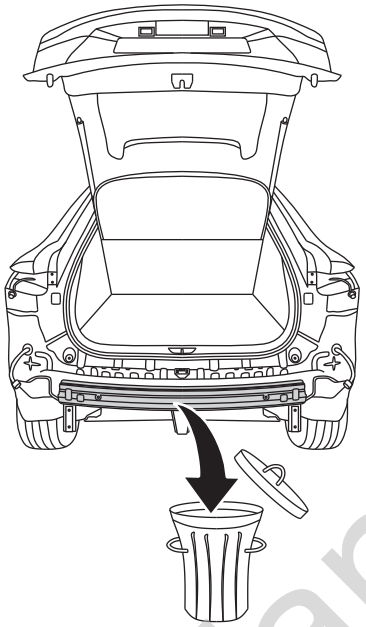

04

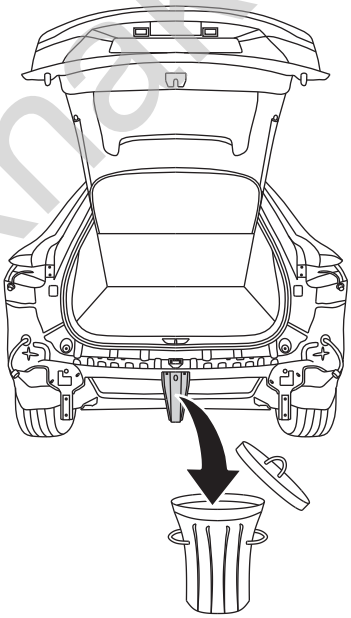

05

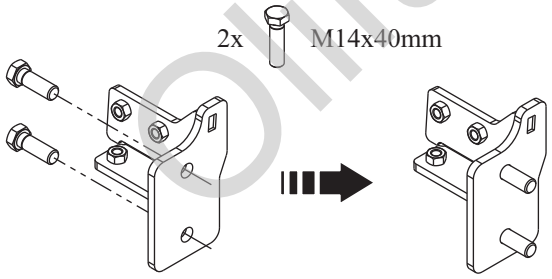

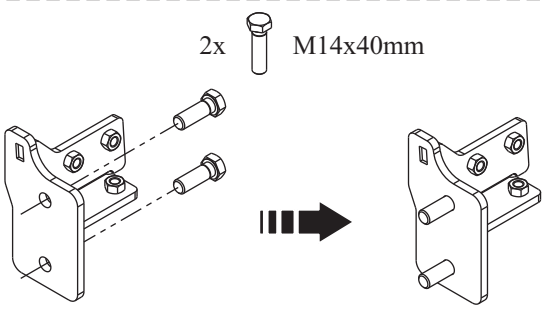

06

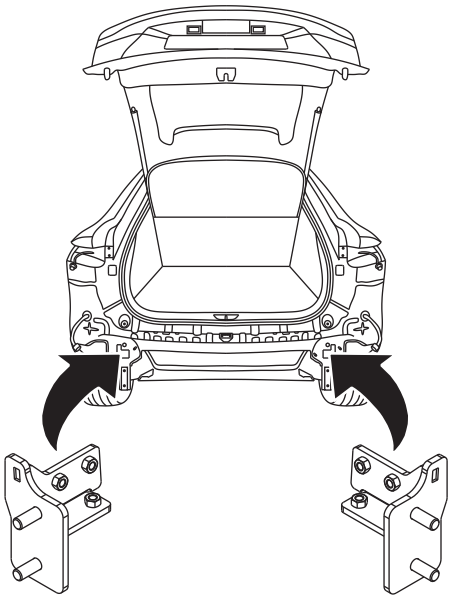

Olifant Trekhaken

07

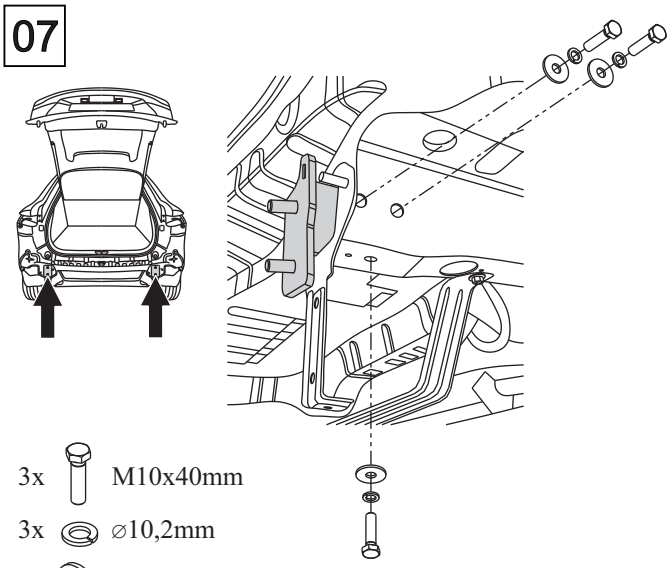

3x M10x40mm
3x ⌀10,2mm
3x ⌀30x⌀10,5x2,5mm

08

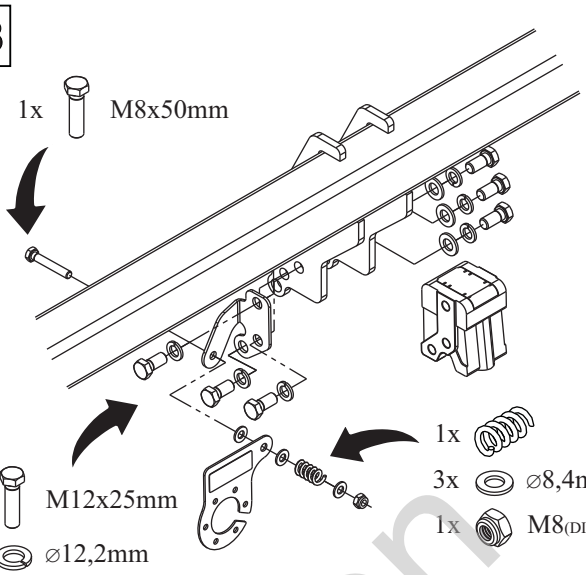

1x M8x50mm
6x M12x25mm
6x ⌀12,2mm
3x ⌀13mm
1x
3x ⌀8,4mm
1x M8(DIN985)

09

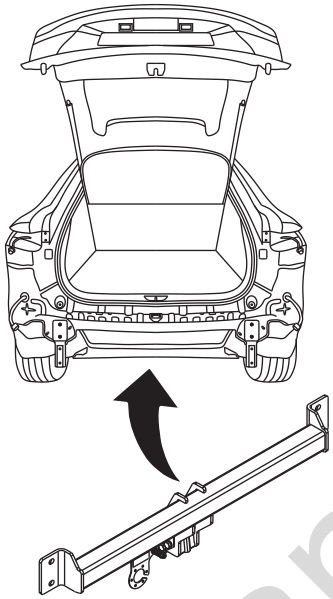

10

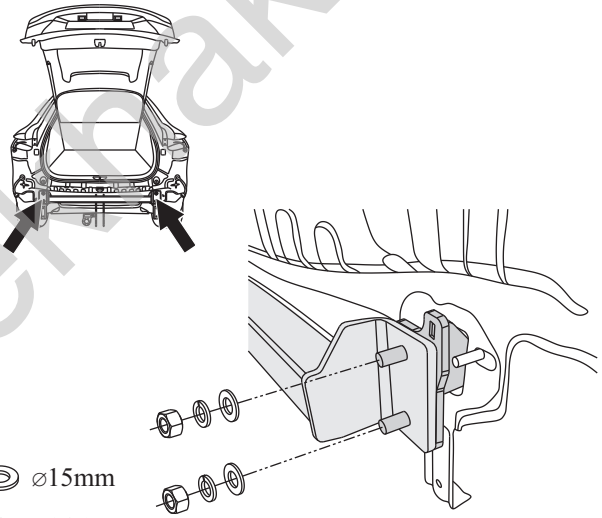

2x ⌀15mm
2x ⌀14,2mm
2x M14

11

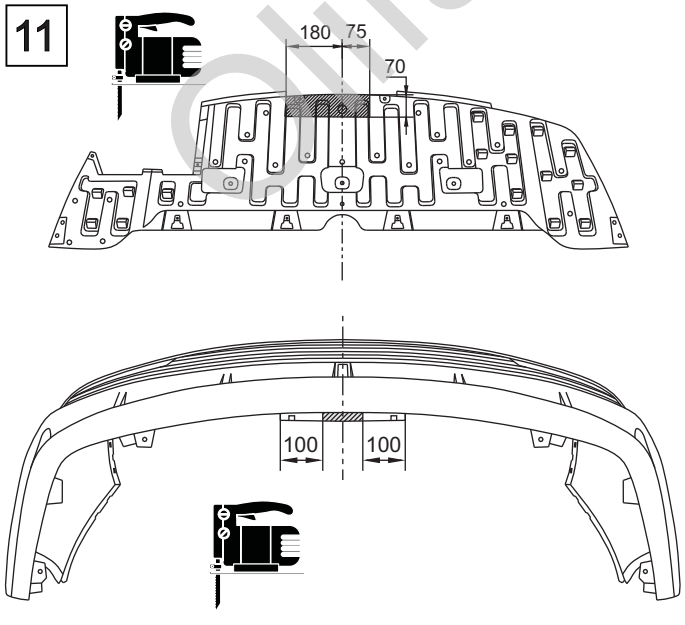

12

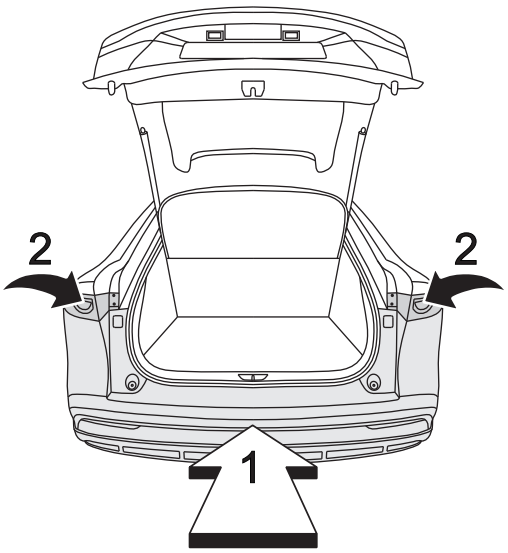

Olifant Trekhaken

13

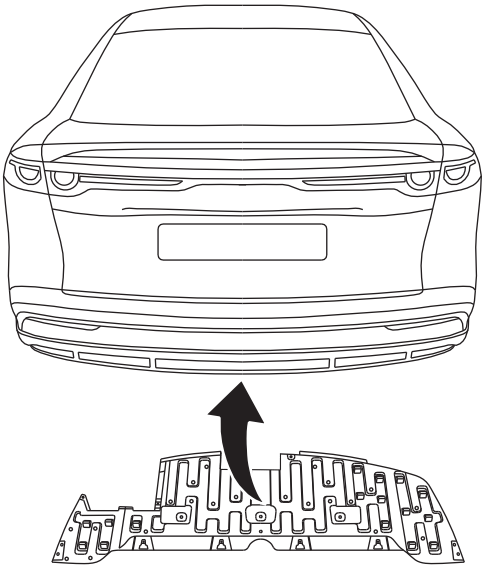

14

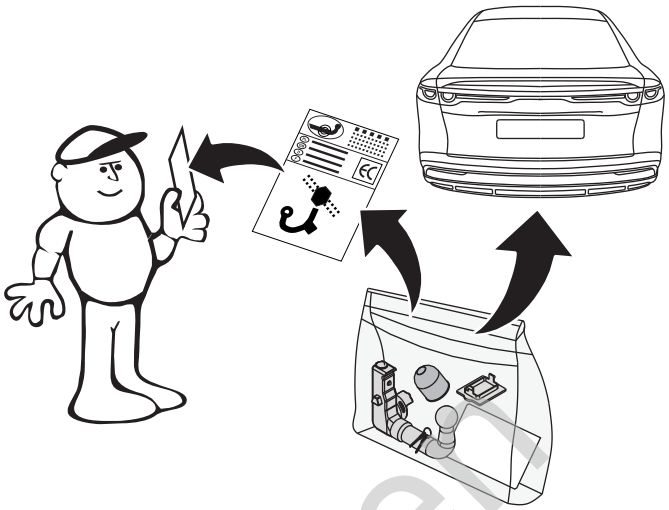

Olifant Trekhaken