AUTO-HAK Sp. z o.o.
ul. Słoneczna 16K 76-200 SŁUPSK
POLAND
tel/fax +48 59 8 414 414; +48 59 8 414 413
e-mail: office@autohak.com.pl
www.autohak.com.pl

AUTO-HAK

LEXUS UX200

Nr kat.
O101V

10.2018 →

E20-55R-02 6192

5,7 kN

R=750 kg

S=75 kg

2h

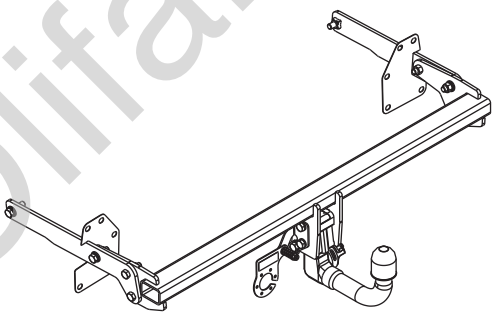

FULL VERSION INSTRUCTION

śruba / Nm	M6	M8	M10	M12	M14	M16
klasa 8.8	9,9	24	48	83	132	200
klasa 10.9	14	34	67	117	185	285

0 km → 1000 km

Olifant trekhaken

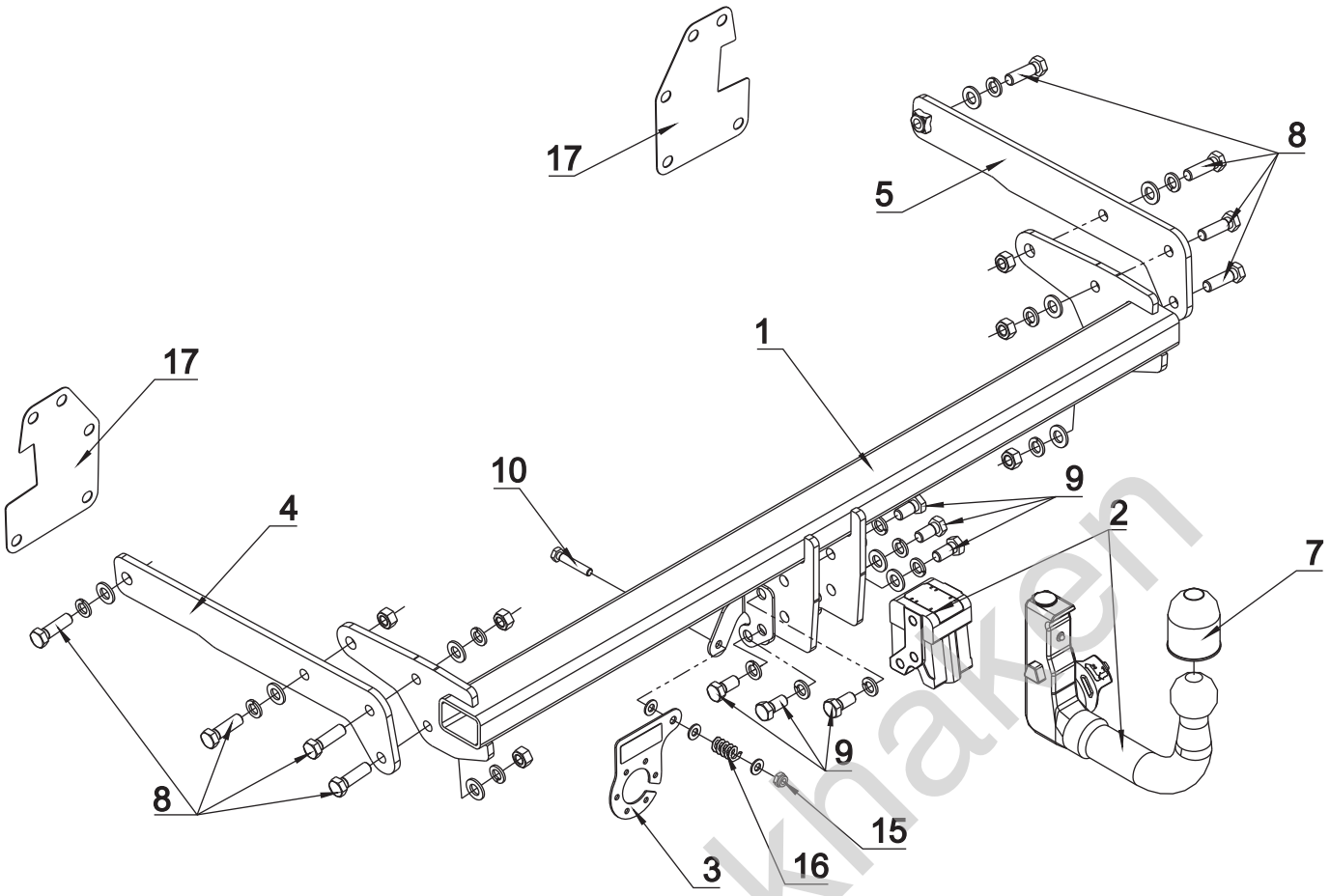

1	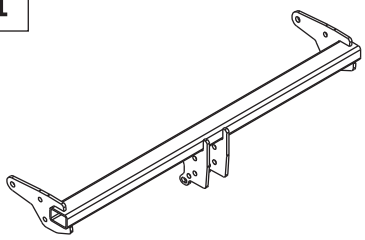	x 1
2	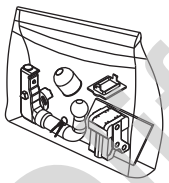 Art.nr-KL1O101V	x 1
3	 Art.nr-BL1T12	x 1
4	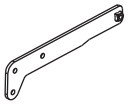	x 1
5	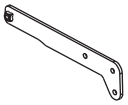	x 1
6		x 1
7		x 1

8	M12x40	x 8
9	M12x25	x 6
10	M8x45	x 1
11	ø 13	x 11
12	ø 8.4	x 3
13	ø 12.2	x 14
14	M12	x 6
15	M8 (DIN985)	x 1

16	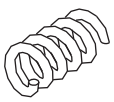	x 1
17		x 2

Origant trekhaken

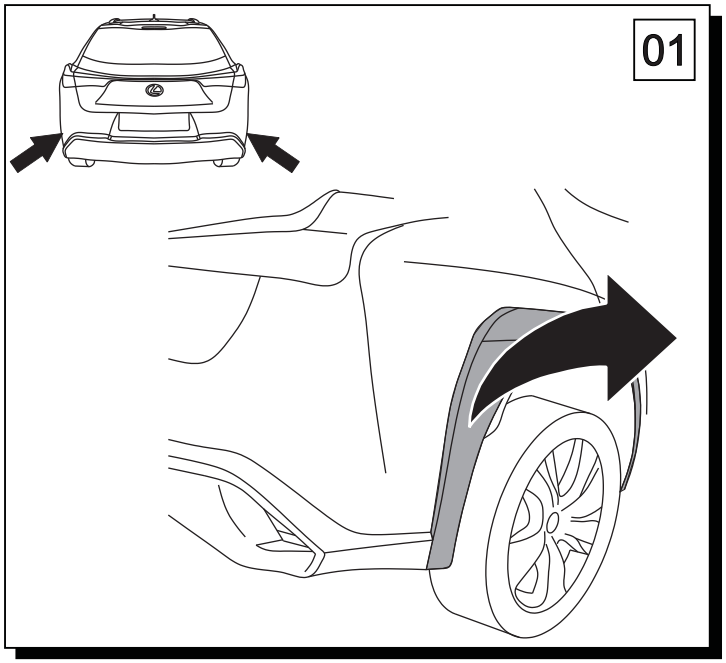

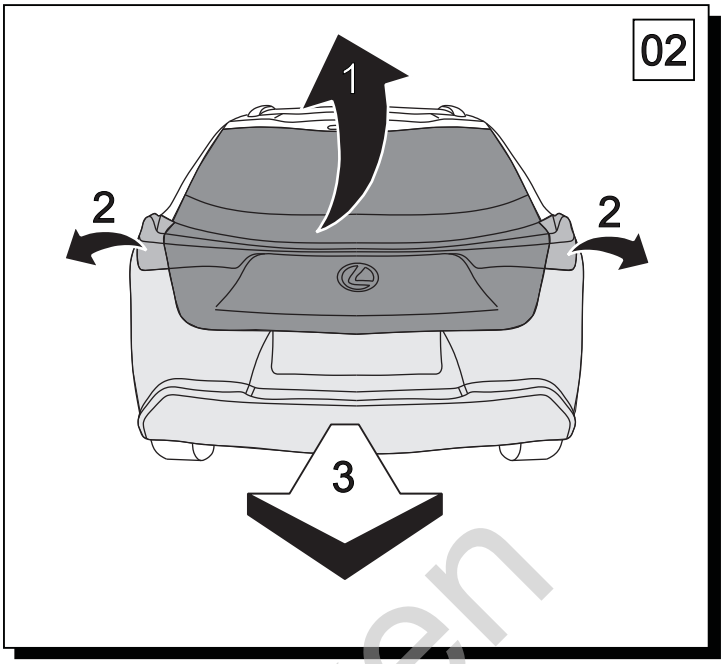

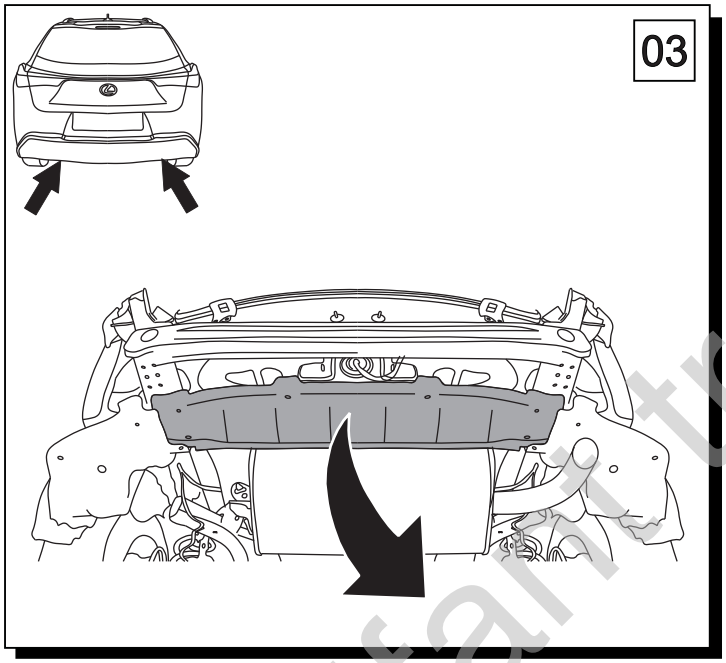

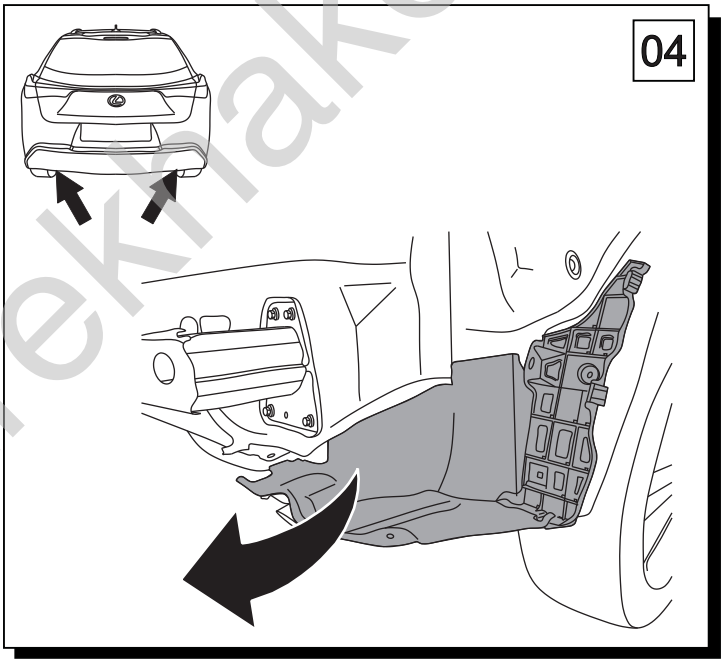

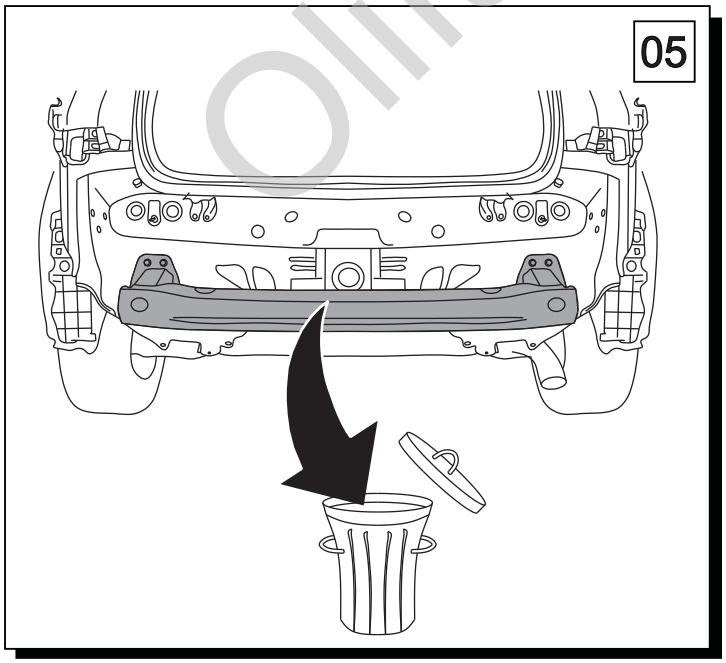

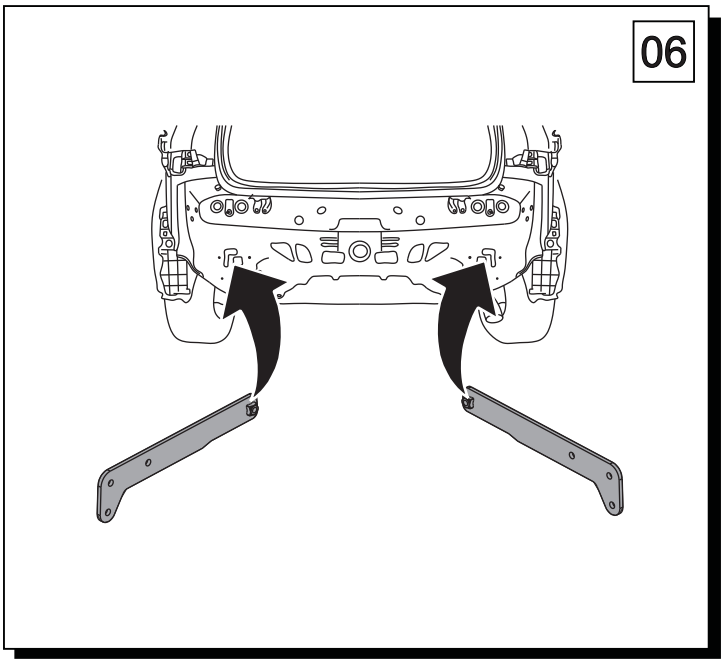

Olifant trekhaken

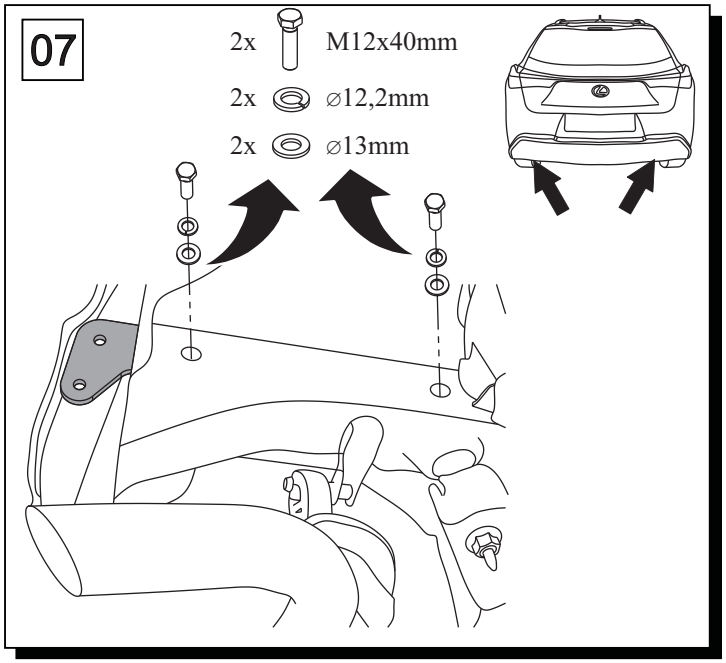

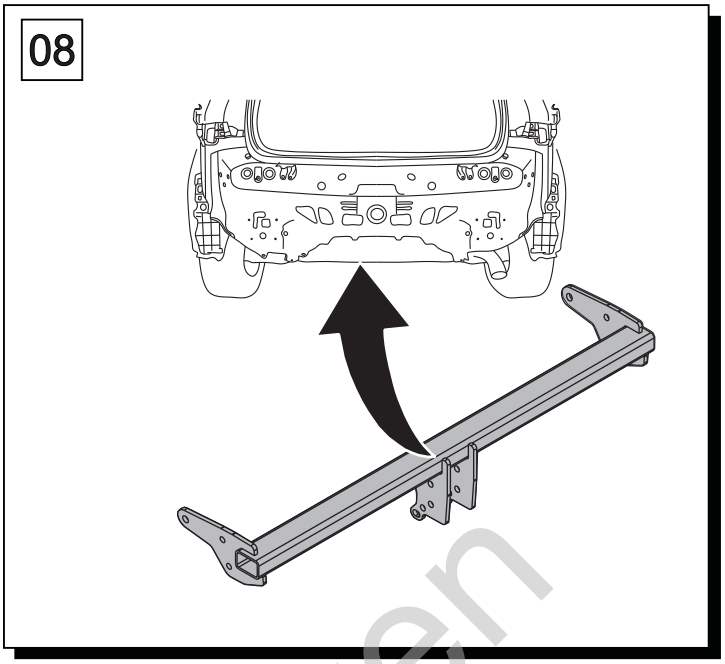

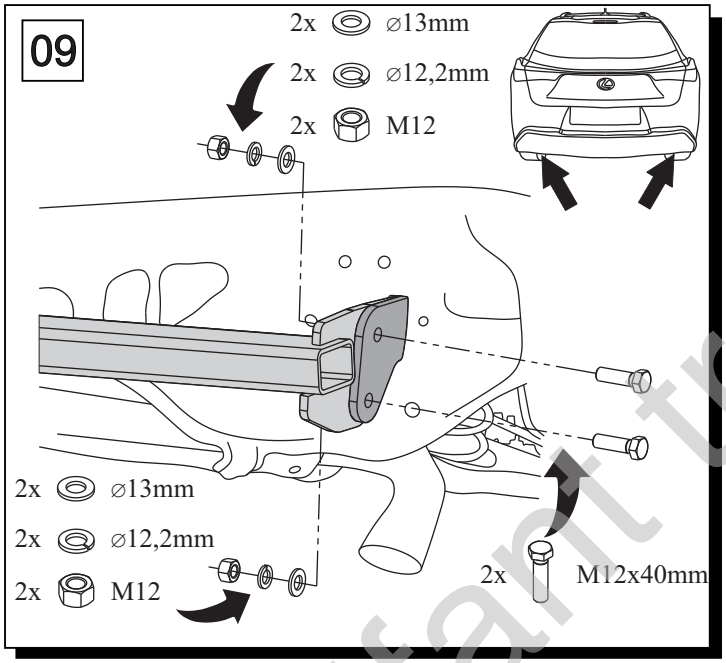

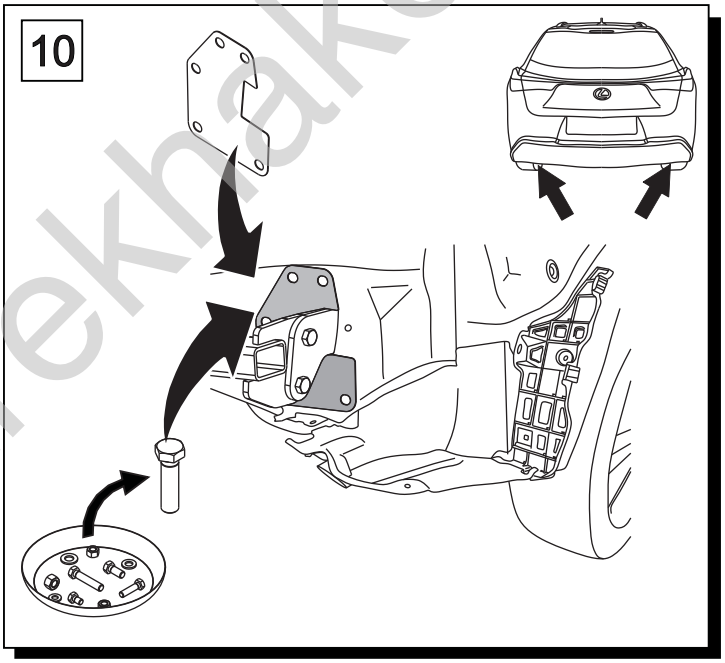

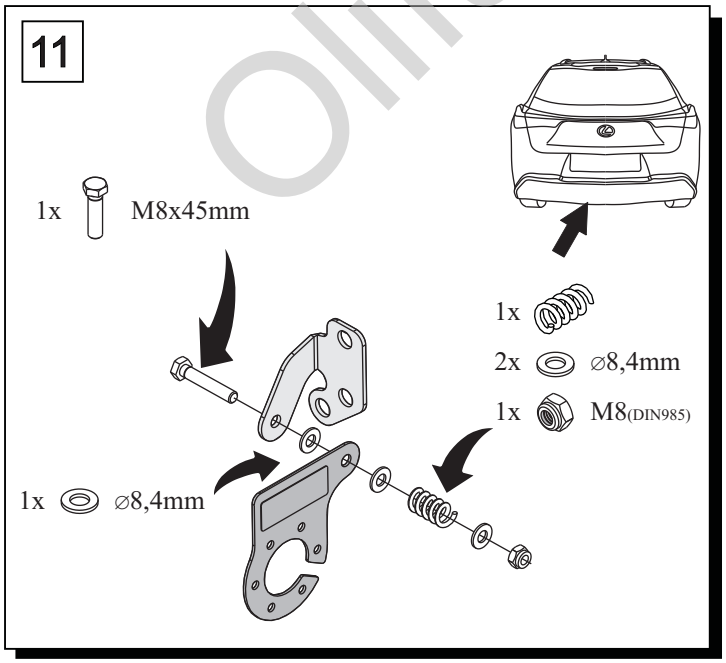

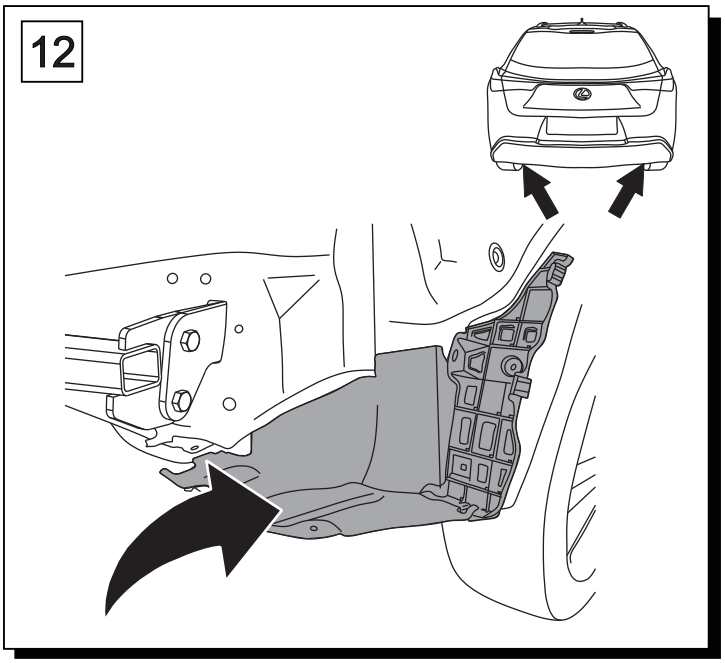

Olifant trekhaken

13

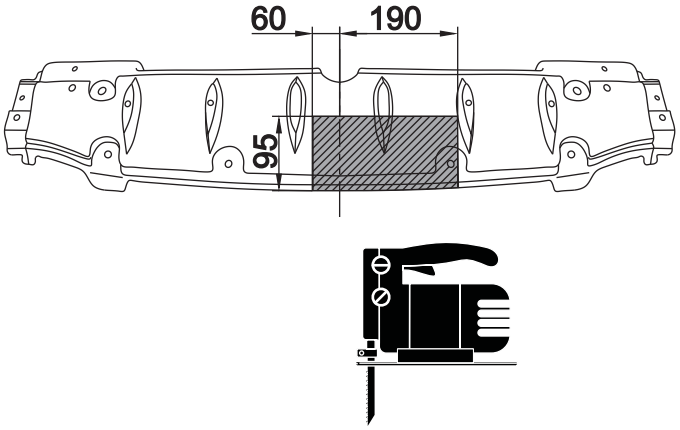

14

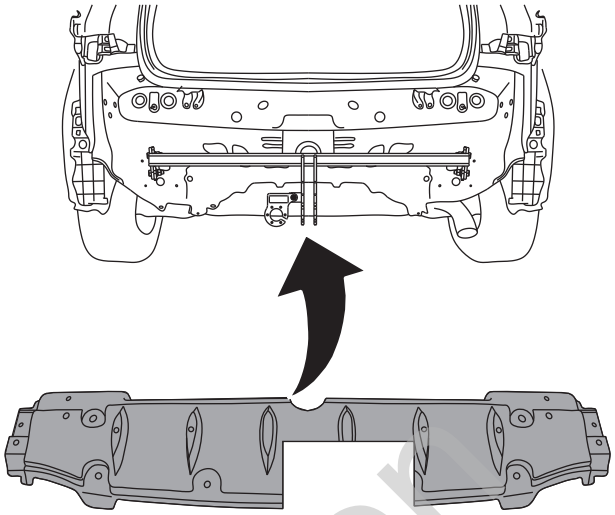

15

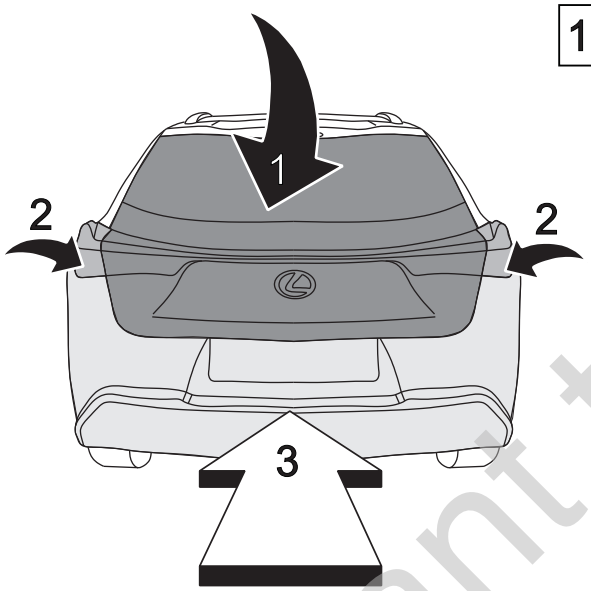

16

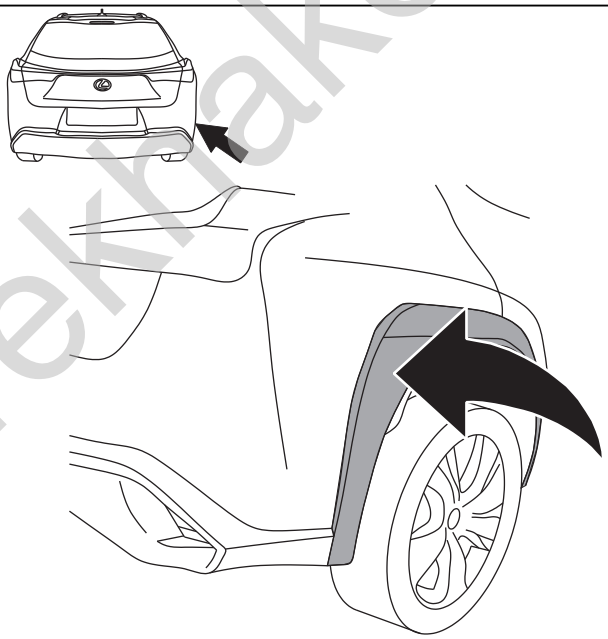

17

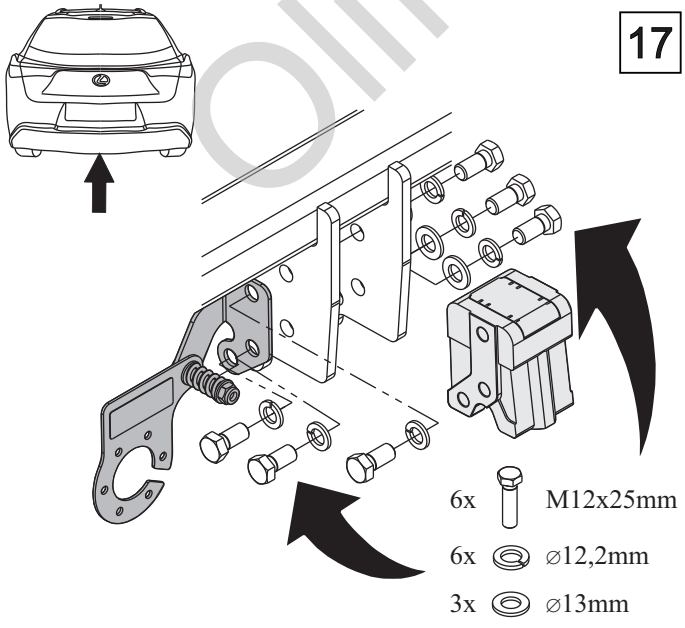

18

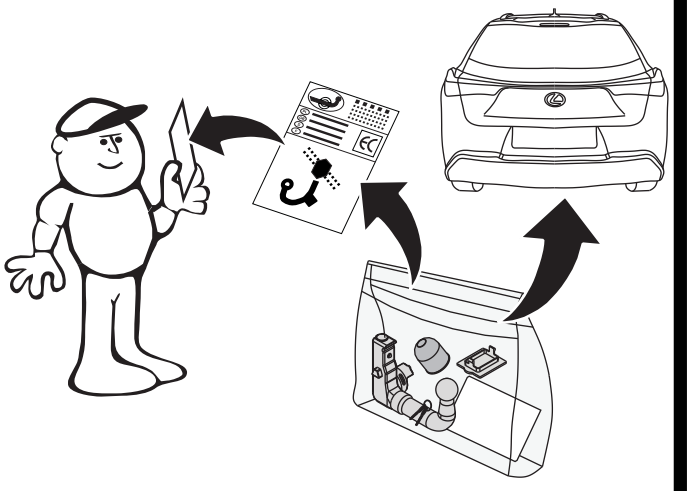

Olifant trekhaken