AUTO-HAK Sp. z o.o.
ul. Słoneczna 16K 76-200 SŁUPSK
POLAND
tel/fax +48 59 8 414 414; +48 59 8 414 413
e-mail: office@autohak.com.pl
www.autohak.com.pl

AUTO-HAK

MG HS II (+HYBRID)

Nr kat.
MG03A

10.2024 →

E20 55R-03 7044

D 9,31 kN

R=1750 kg

S=90 kg

2h

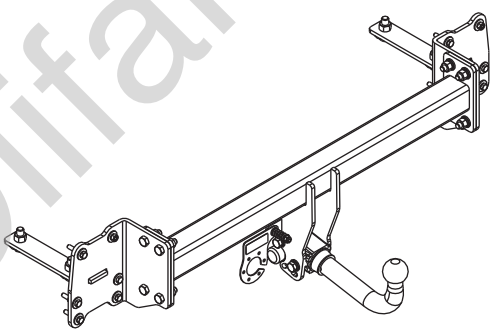

FULL VERSION INSTRUCTION

śruba / Nm	M6	M8	M10	M12	M14	M16
klasa 8.8	9,9	24	48	83	132	200
klasa 10.9	14	34	67	117	185	285

0 km → 1000 km

Olifant Trekhaken

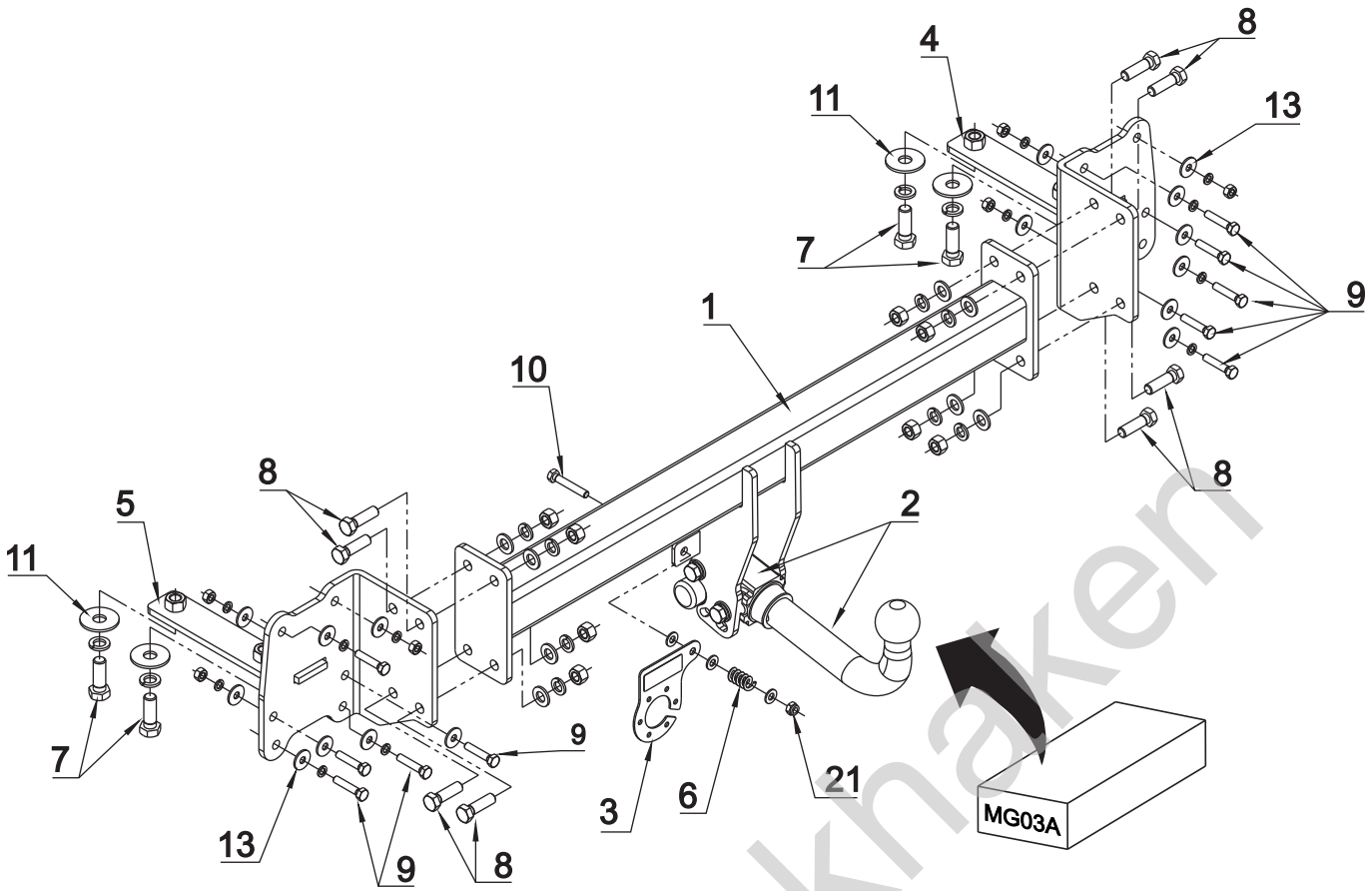

1	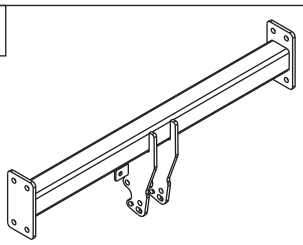	x 1	7	M14x40	x 4
2	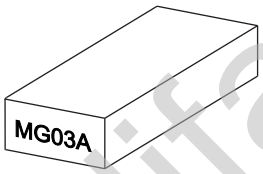	x 1	8	M12x40	x 8
3		x 1	9	M8x40	x 10
4	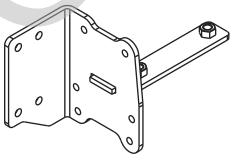	x 1	10	M8x50	x 1
5	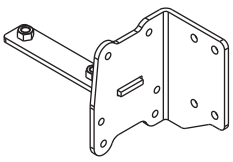	x 1	11	ø 44xø15x3 14 (DIN 9021)	x 4
6		x 1	12	ø 13	x 8
			13	ø 24xø8.5x2 8 (DIN 9021)	x 16
			14	ø 8.4	x 3
			15	ø 14.2	x 4
			16	ø 12.2	x 8
			17	ø 8.2	x 12
			18	M12	x 8
			19	M8	x 6
			20	M8 (DIN985)	x 1

Olifant Trekhaken

01

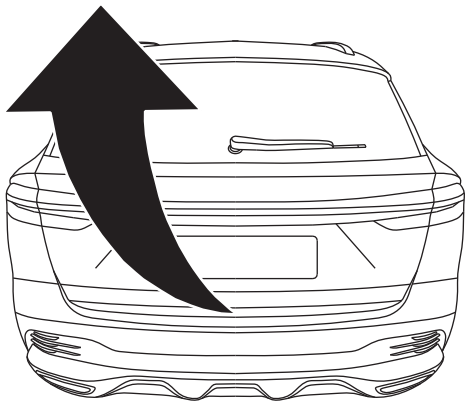

02

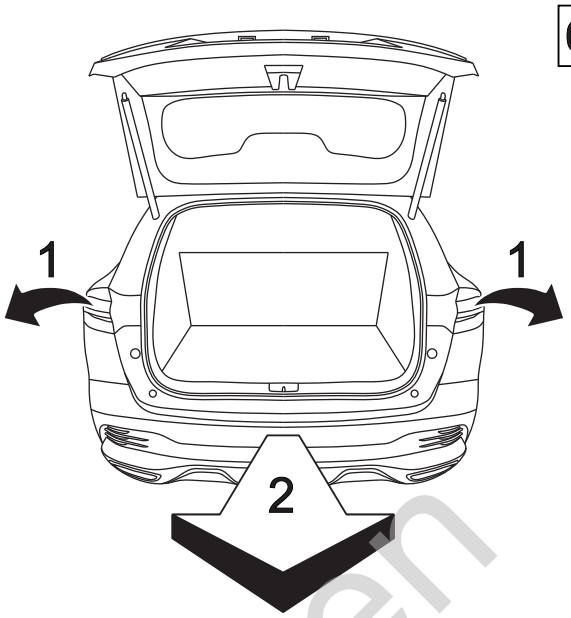

03

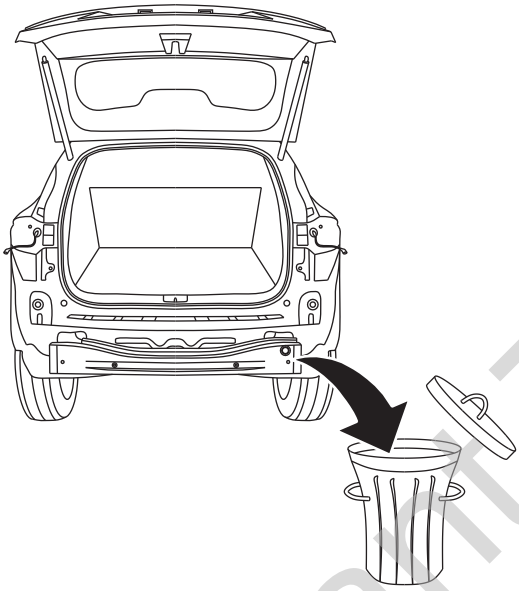

04

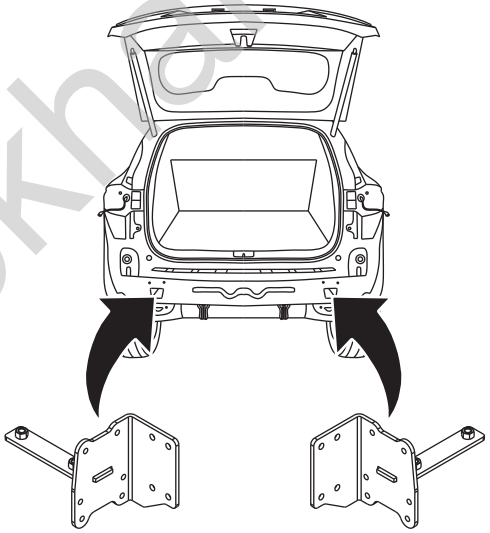

05

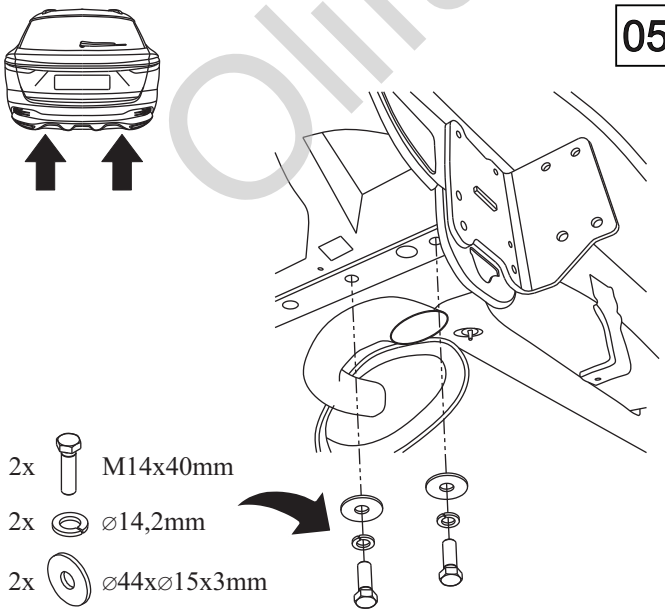

06

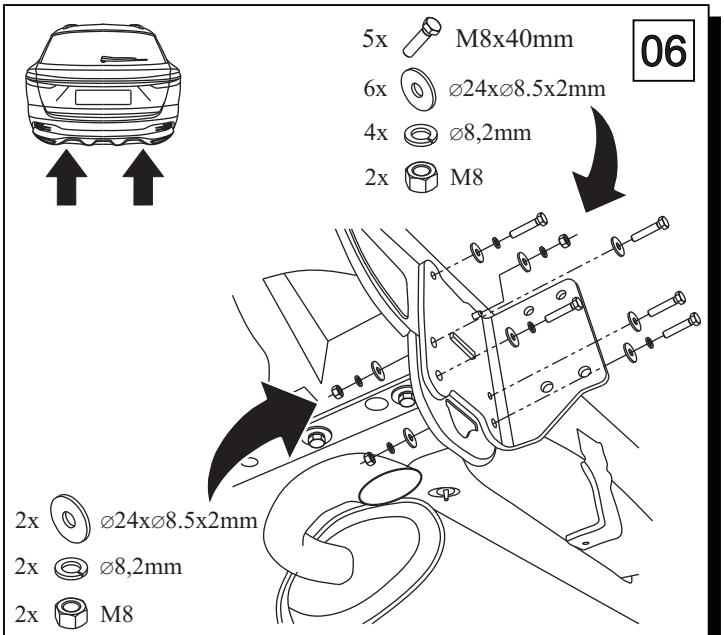

Olifant Trekhaken

07

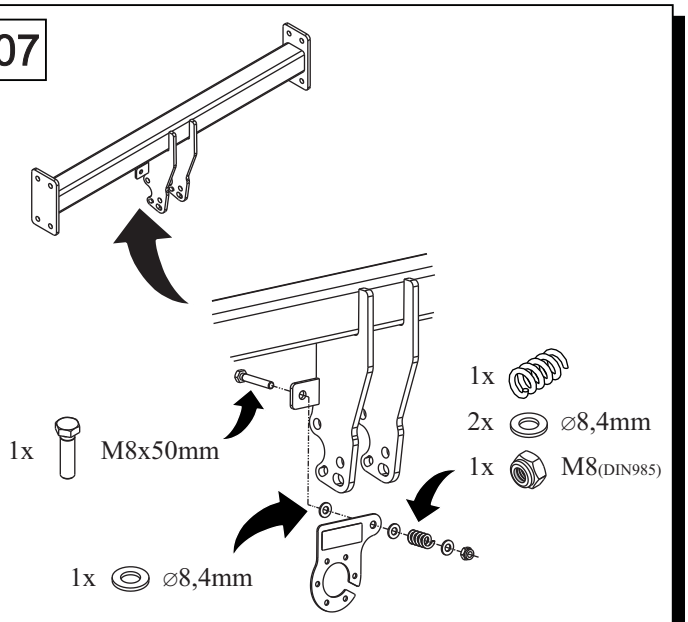

08

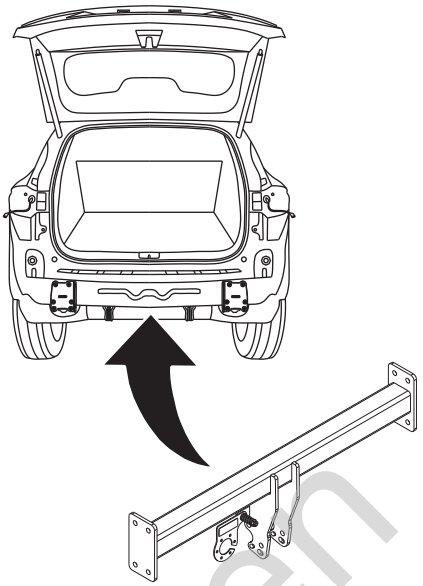

09

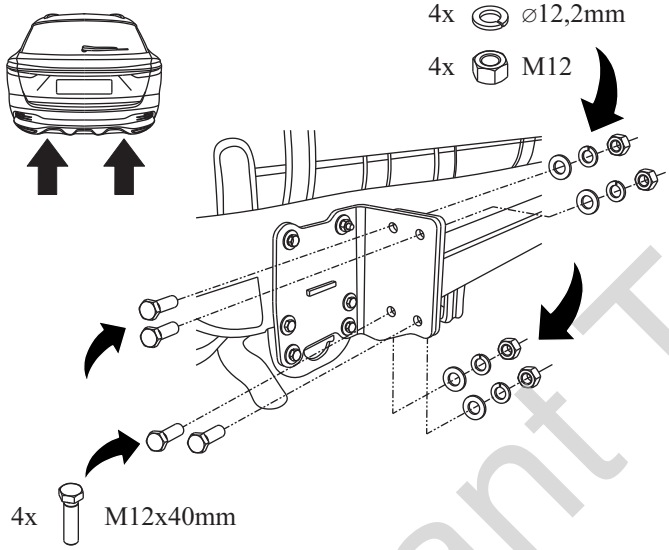

10

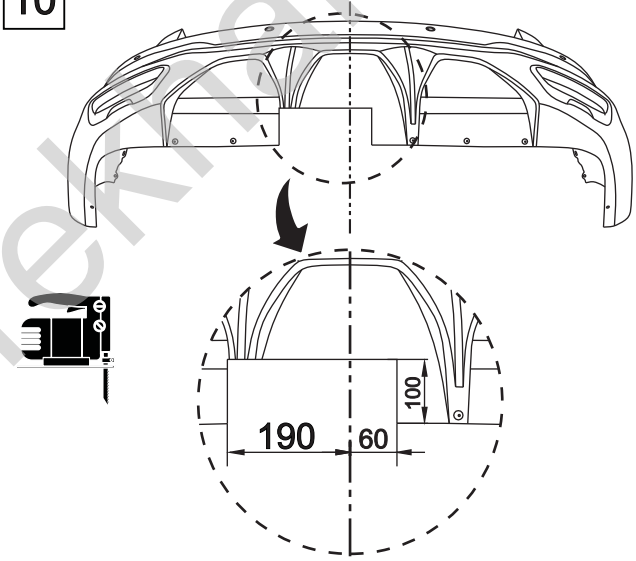

11

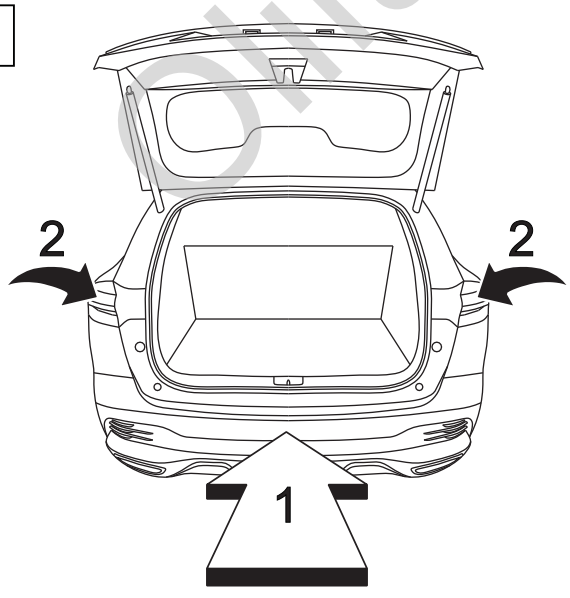

12

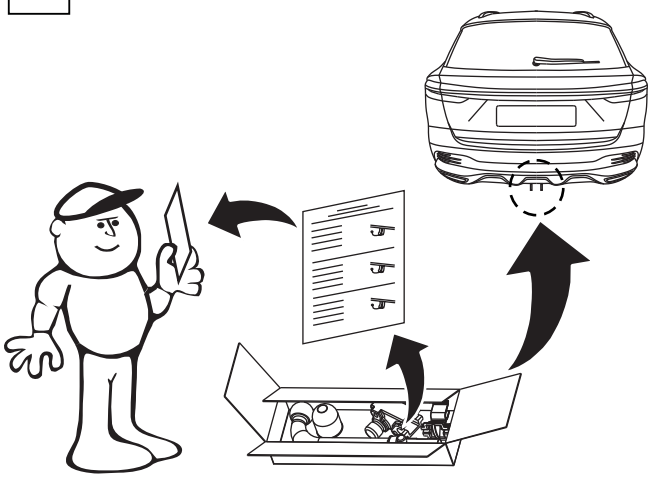

Olifant Trekhaken