AUTO-HAK Sp. z o.o.
ul. Słoneczna 16K 76-200 SŁUPSK
POLAND
tel/fax +48 59 8 414 414; +48 59 8 414 413
e-mail: office@autohak.com.pl
www.autohak.com.pl

AUTO-HAK

MITSUBISHI OUTLANDER

Nr kat.
Z48A

03.2025 →

E20 55R-03 7347

D 11,5 kN

kg R=2000 kg

S=120 kg

2h

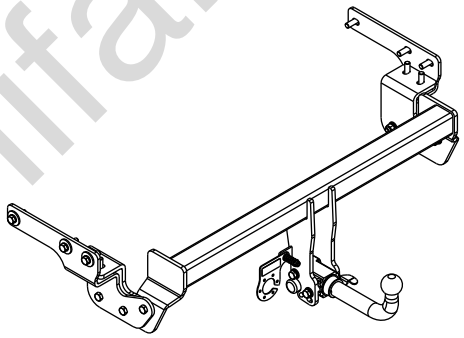

FULL VERSION INSTRUCTION

śruba / Nm	M6	M8	M10	M12	M14	M16
klasa 8.8	9,9	24	48	83	132	200
klasa 10.9	14	34	67	117	185	285

0 km → 1000 km

Olifant Trekhaken

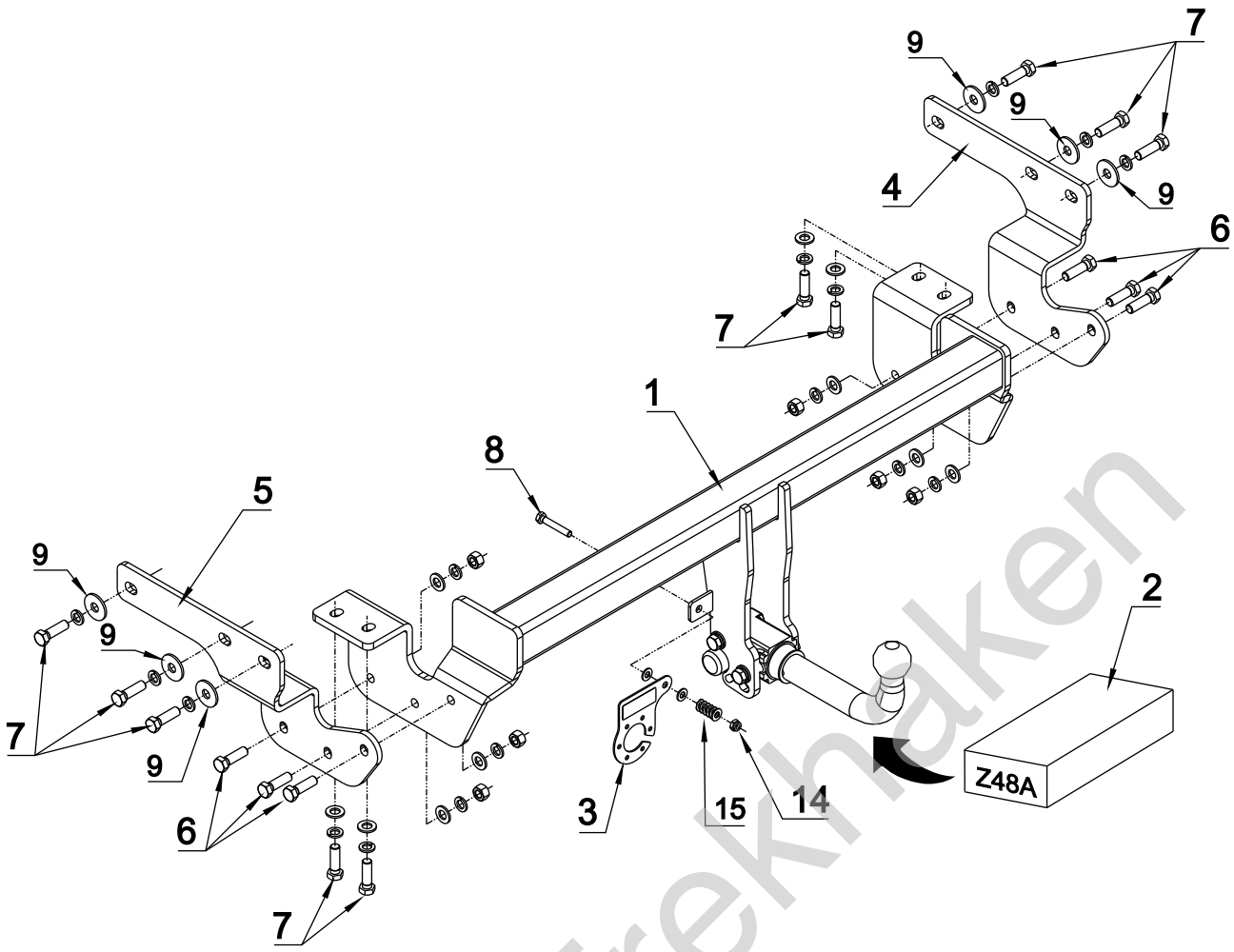

1	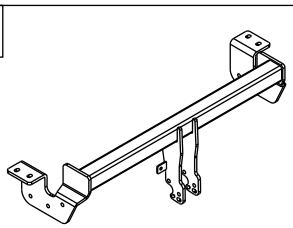	x 1			
2	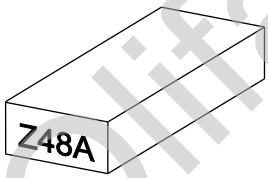 Art.nr-KLAZ48A	x 1			
3	 Art.nr-BL12Z48A	x 1			
4	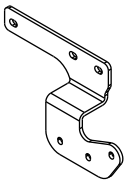	x 1			
5	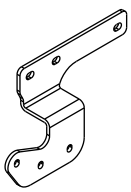	x 1			

	6	M12x40	10.9 / 6
	7	M12x1.25x40	8.8 / 10
	8	M8x50	8.8 / 1
	9	ø 37xø13x3 13 (DIN 9021)	x 6
	10	ø 13	x 10
	11	ø 8.4	x 3
	12	ø 12.2	x 16
	13	M12	x 6
	14	M8 (DIN985)	x 1
15 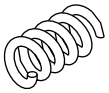			x 1

Elitant Trekhaken

01

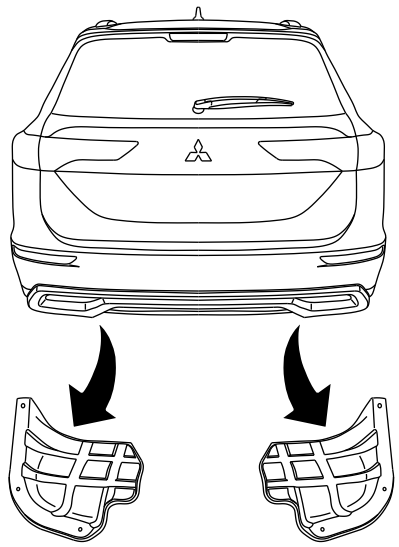

02

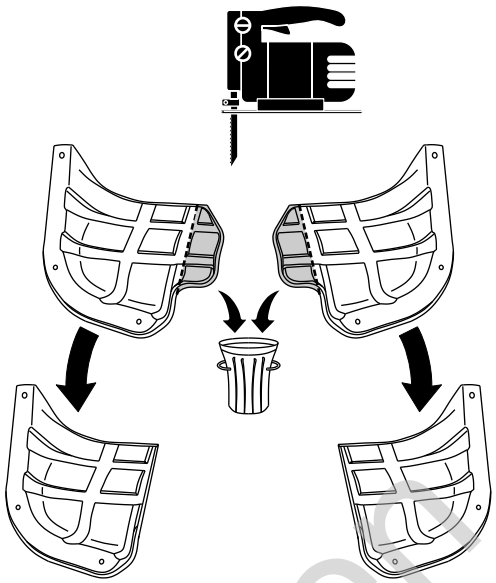

03

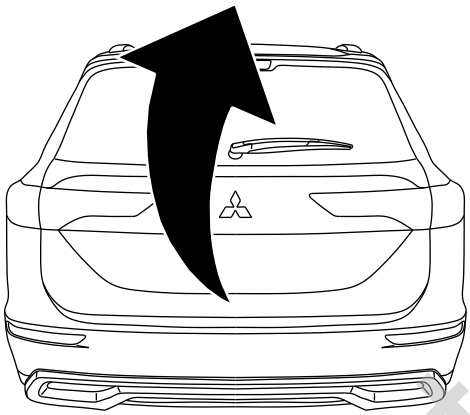

04

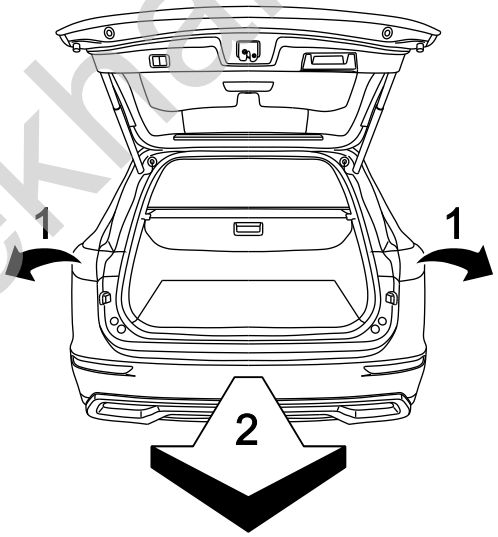

05

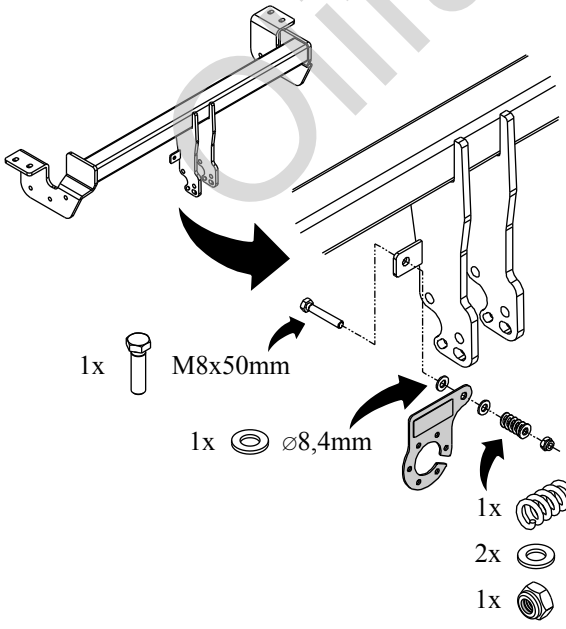

06

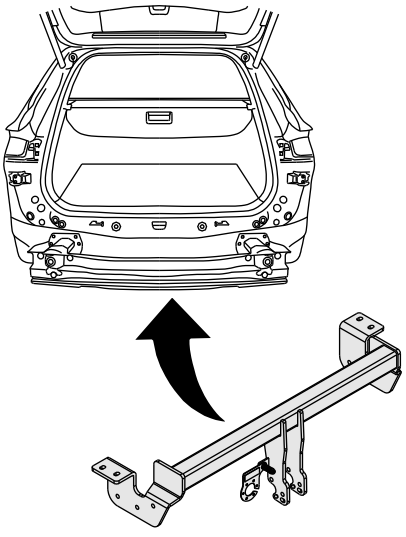

Oifant Treknaker

07

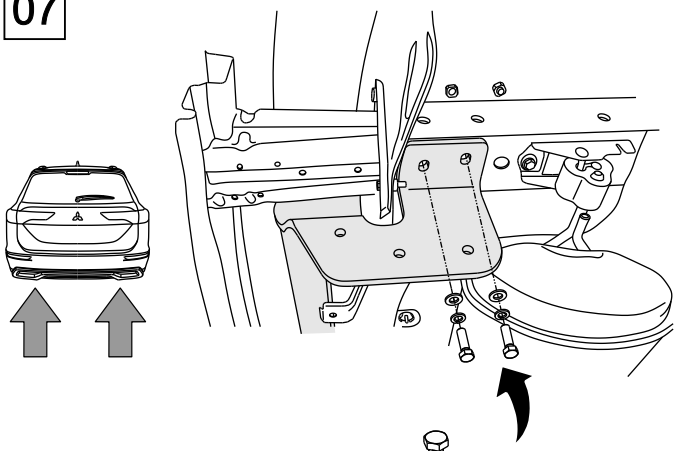

2x M12x1,25x40mm
2x ⌀12,2mm
2x ⌀13mm

08

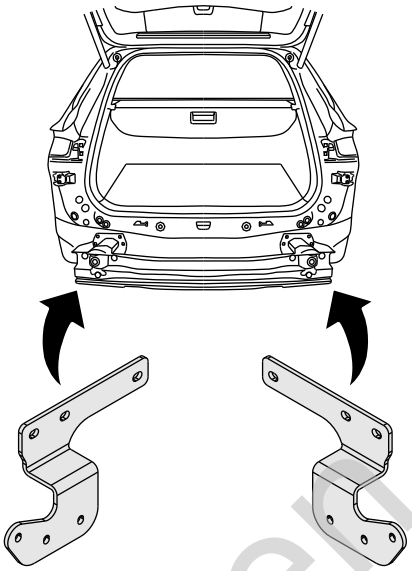

09

3x M12x1,25x40mm
3x ⌀12,2mm
3x ⌀37x⌀13x3mm

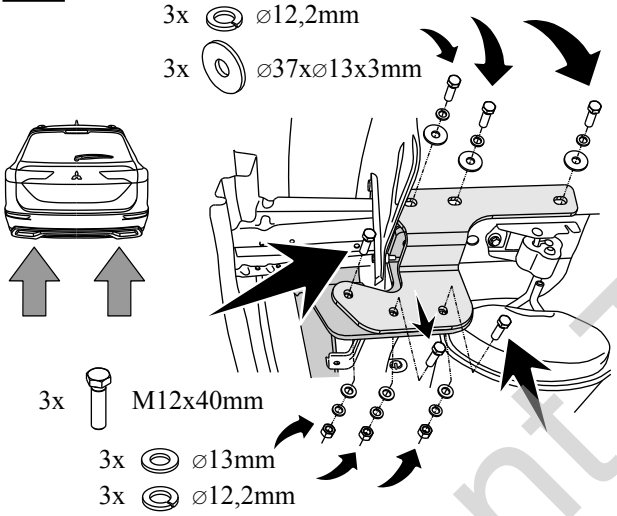

3x M12x40mm
3x ⌀13mm
3x ⌀12,2mm
3x M12

10

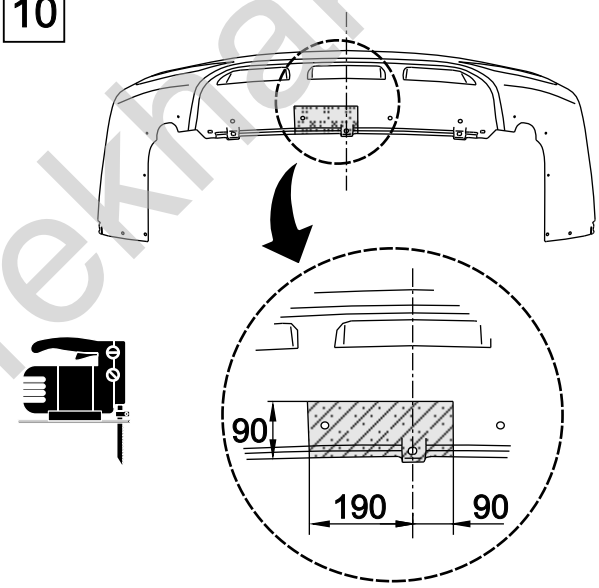

11

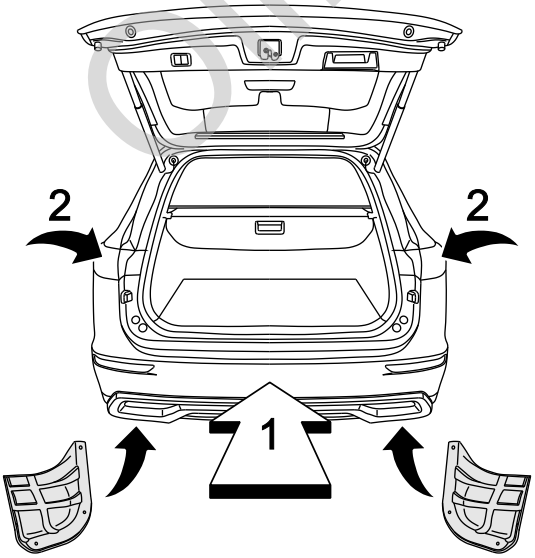

12

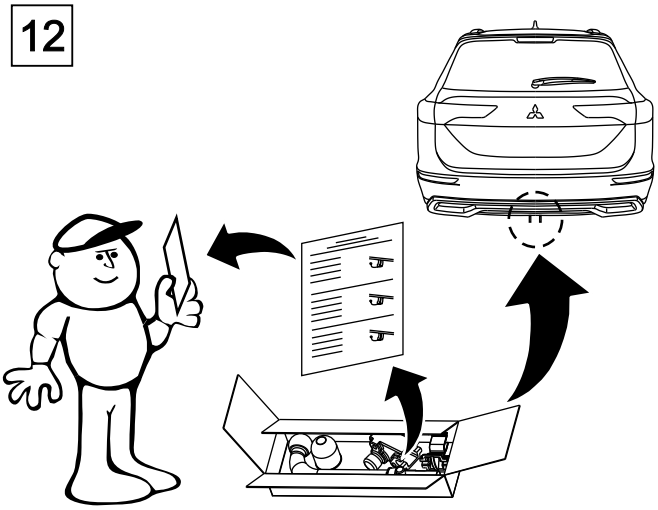

©Ifant Trekhaken