AUTO-HAK Sp. z o.o.
ul. Słoneczna 16K 76-200 SŁUPSK
POLAND
tel/fax +48 59 8 414 414; +48 59 8 414 413
e-mail: office@autohak.com.pl
www.autohak.com.pl

AUTO-HAK

TESLA MODEL Y

Nr kat.
TE01A

08.2021 → 12.2024
01.2025 →

E20 E20*55R02*6692

D 9,92 kN

kg R=1600 kg

S=158 kg

2h

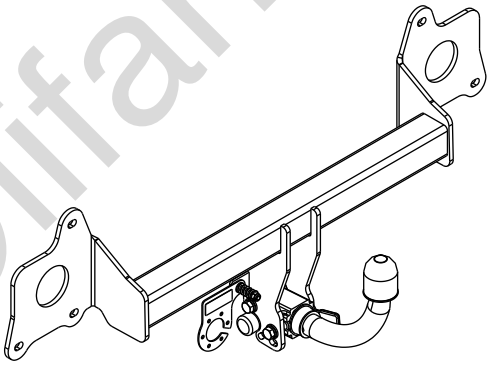

FULL VERSION INSTRUCTION

śruba / Nm	M6	M8	M10	M12	M14	M16
klasa 8.8	9,9	24	48	83	132	200
klasa 10.9	14	34	67	117	185	285

0 km → 1000 km

Olifant Trekhaken

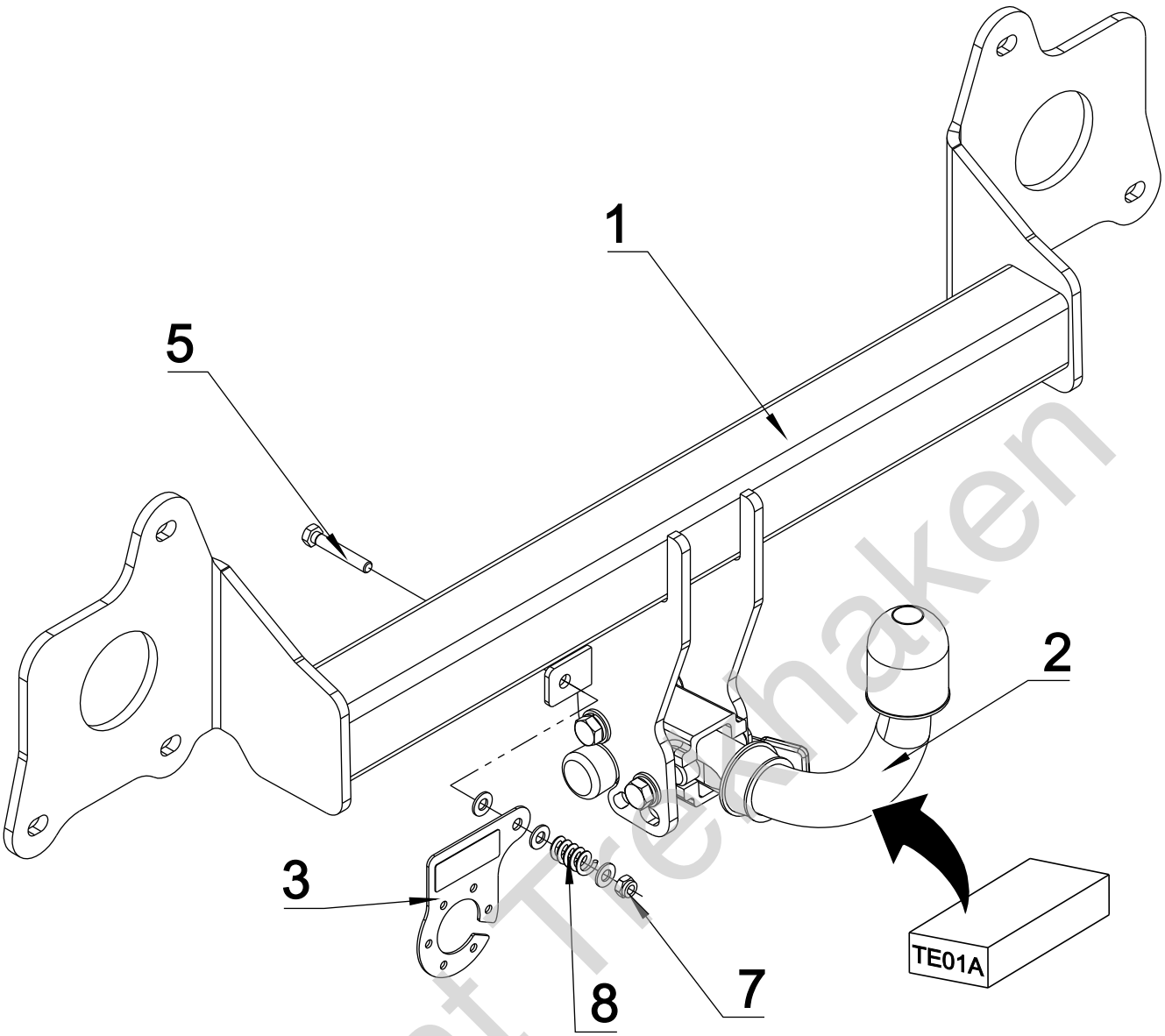

1	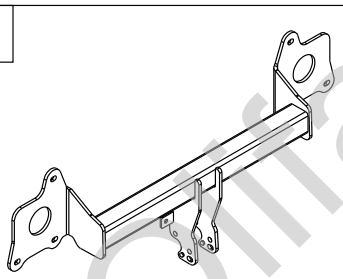	x 1	5	M8x50	x 1
2	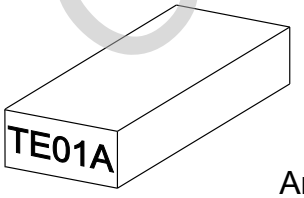 Art.nr-KL1TE01A	x 1	6	ø 8.4	x 3
3	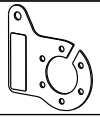 Art.nr-BL1TE01A	x 1	7	M8 (DIN985)	x 1
4	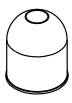	x 1	8	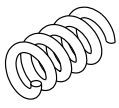	x 1

Oliant Trekhaken

01

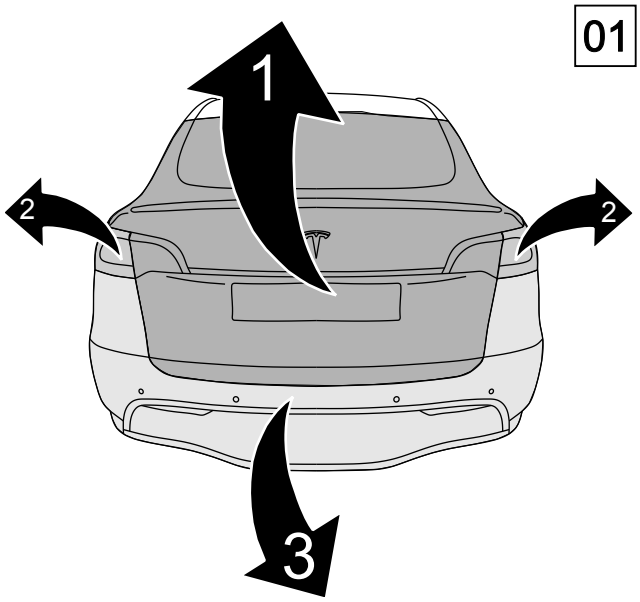

02

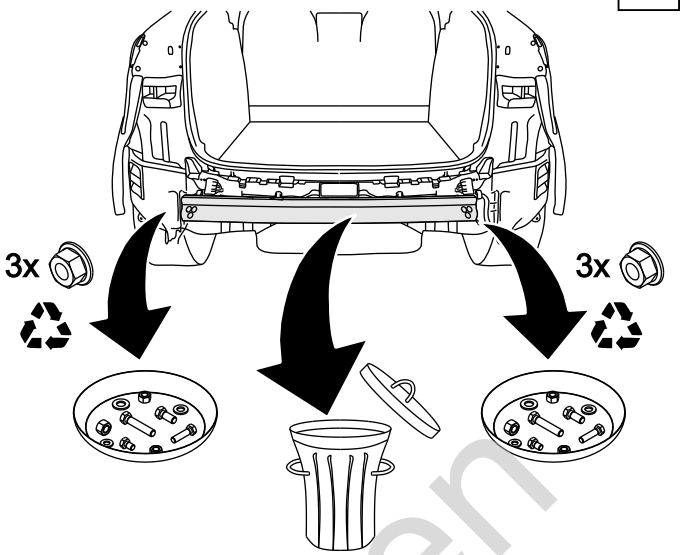

03

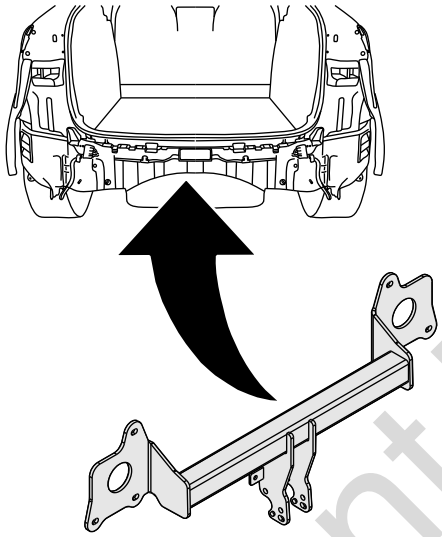

04

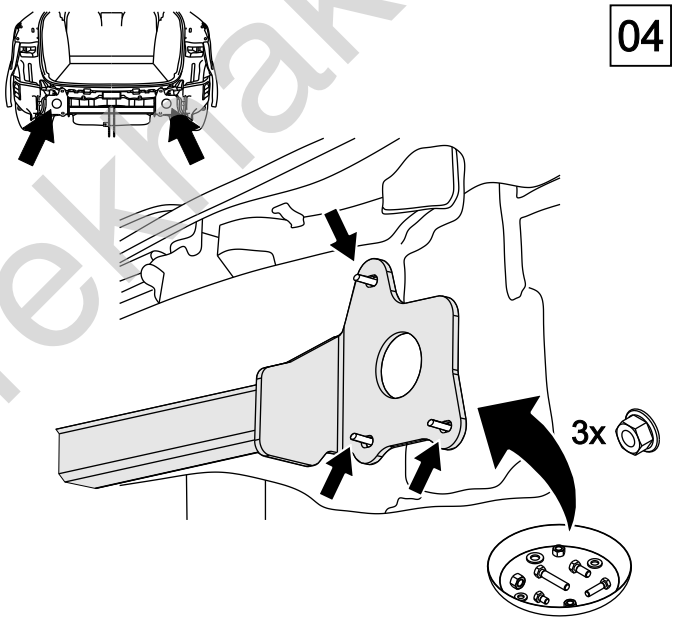

05

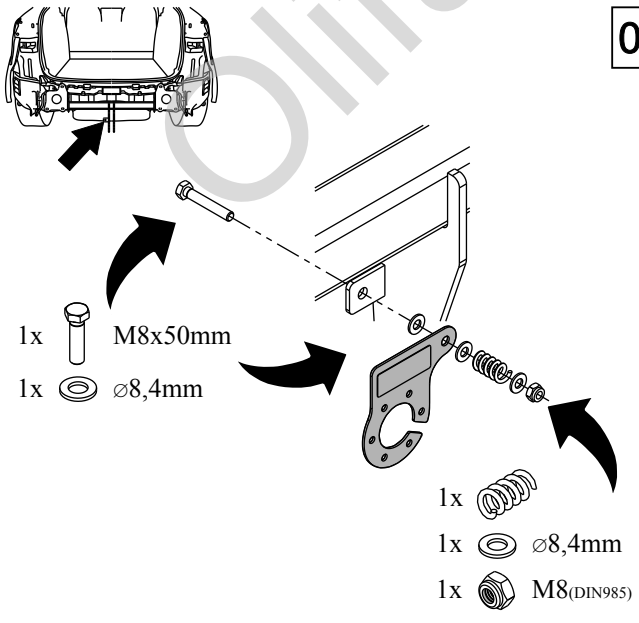

06

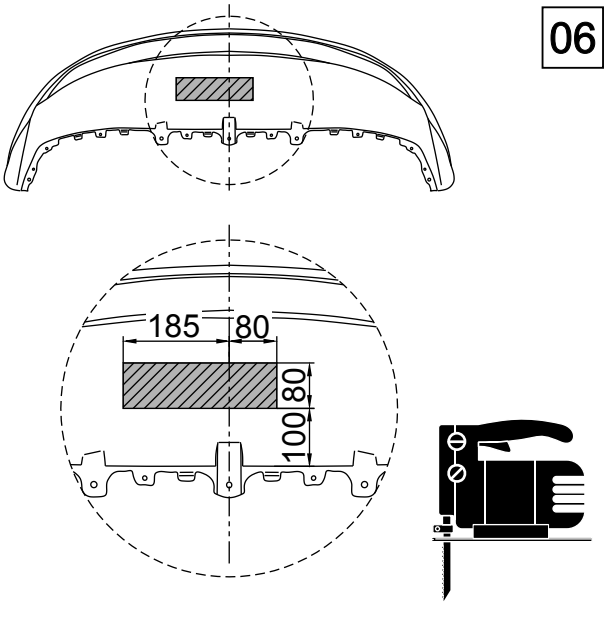

Olifant Trekhaken

07

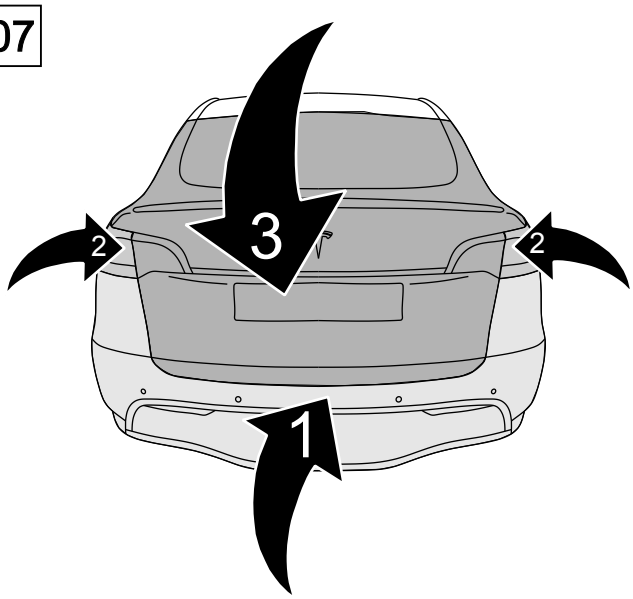

08

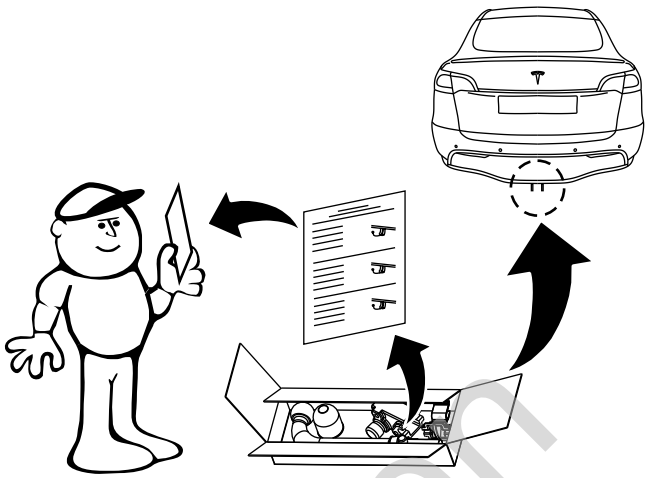

Olifant Trekhaken